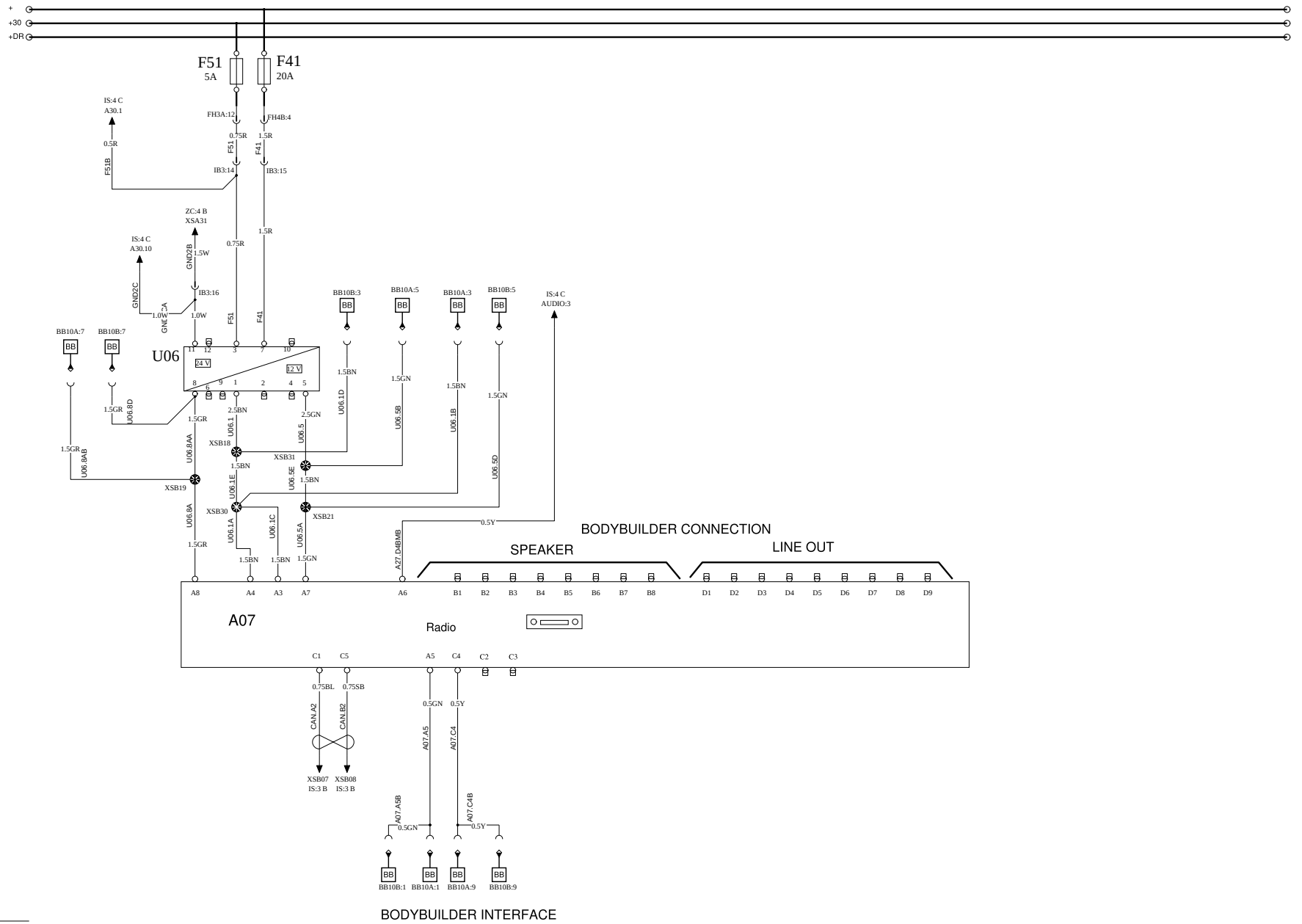

VOLVO	Volvo Bus Corporation	Document title WIRING DIAGRAM IU Document type PRODUCT SCHEMATIC	Document No TP 16782	Issue 02	Volume 01(02)	Page 23(31)