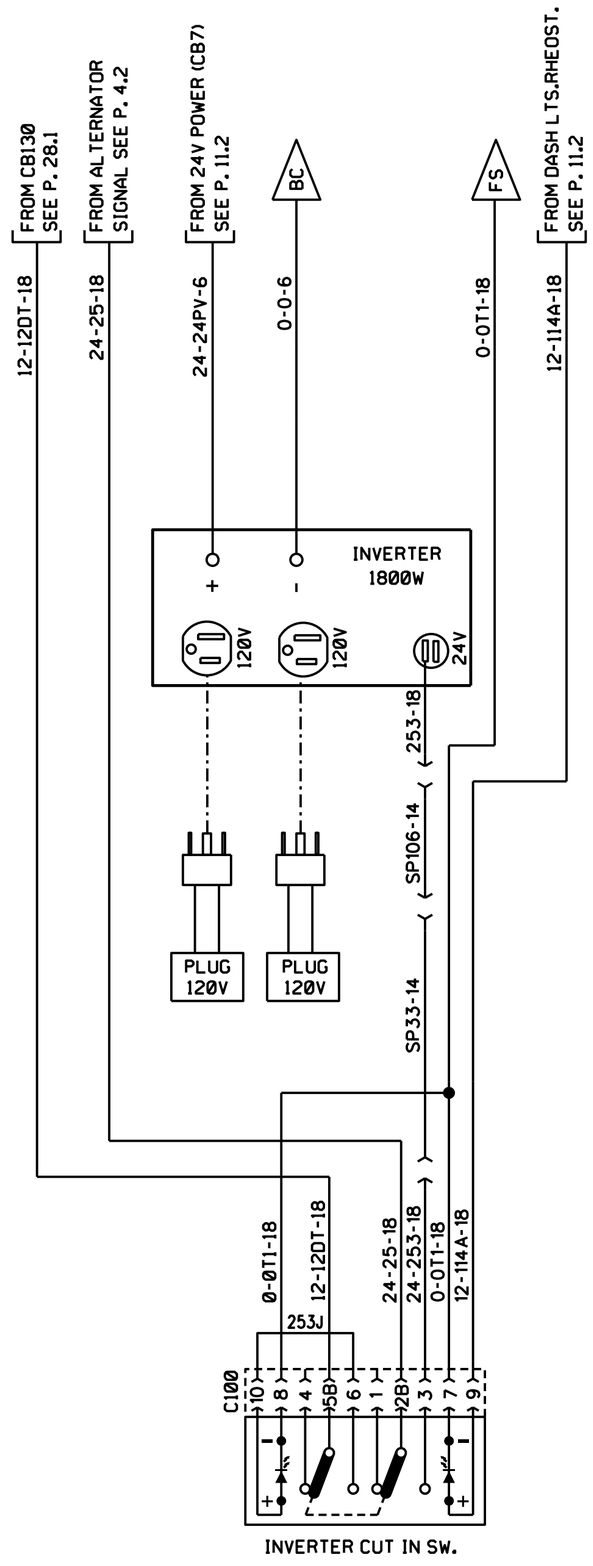

PLUG 120 VOLT

PREVOST	WIRING DIAGRAM	NO: D060902	PAGE: 29.1	REVISION 00