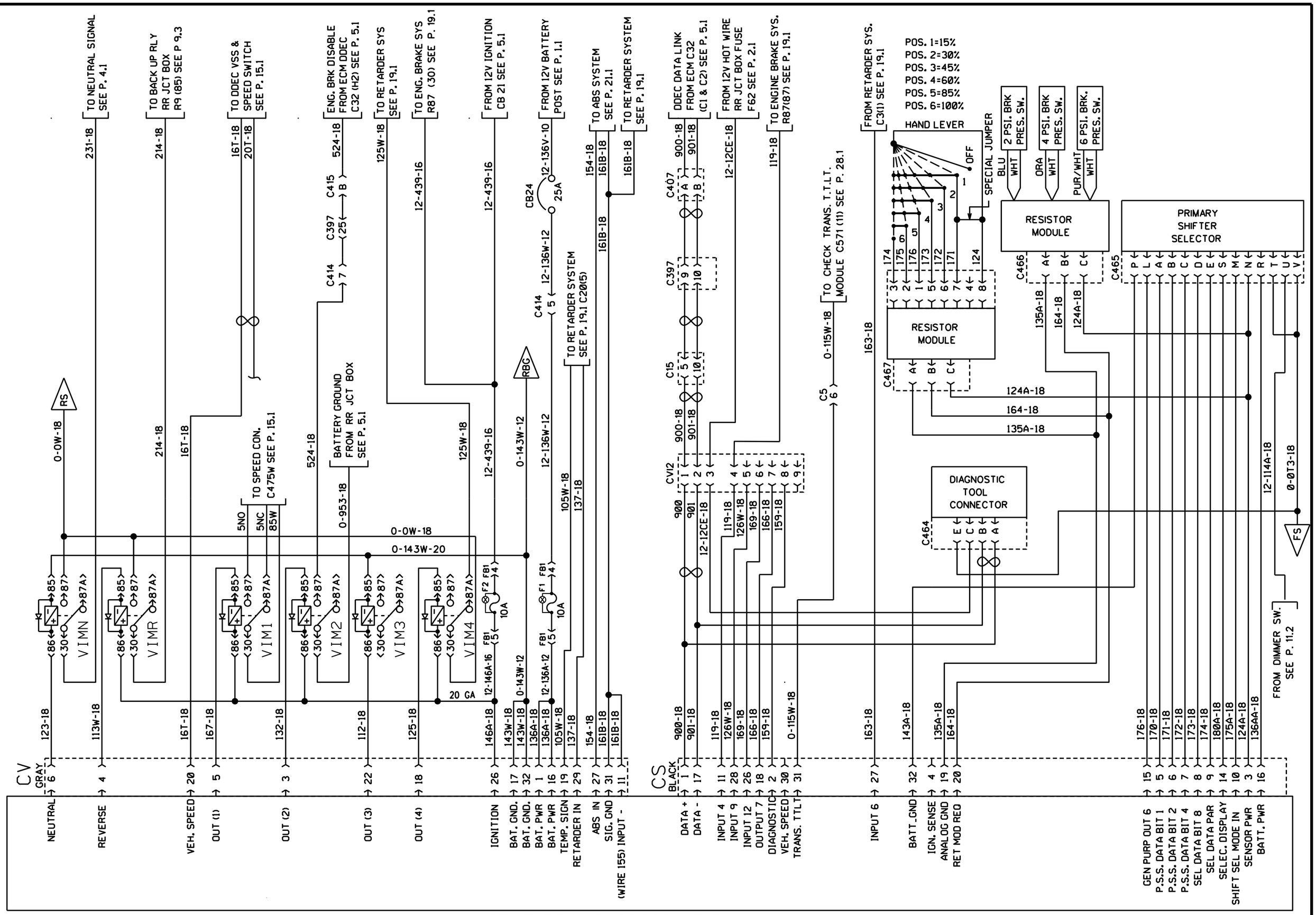

WORLD TRANSMISSION E.C.U.

PREVOST	WIRING DIAGRAM	NO: D060902	PAGE: 6.1sp1	REVISION 00