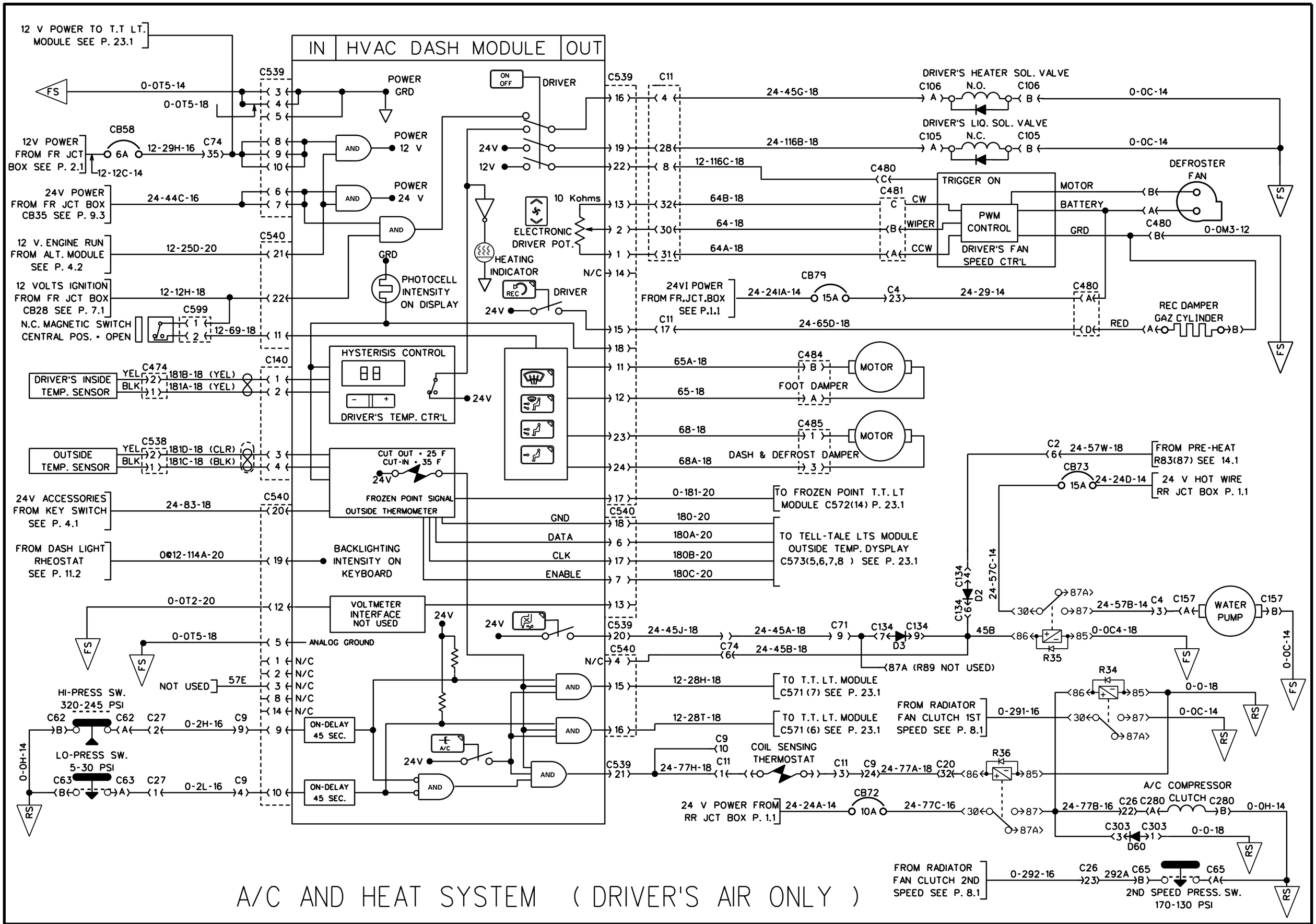

A/C AND HEAT SYSTEM (DRIVER'S AIR ONLY)