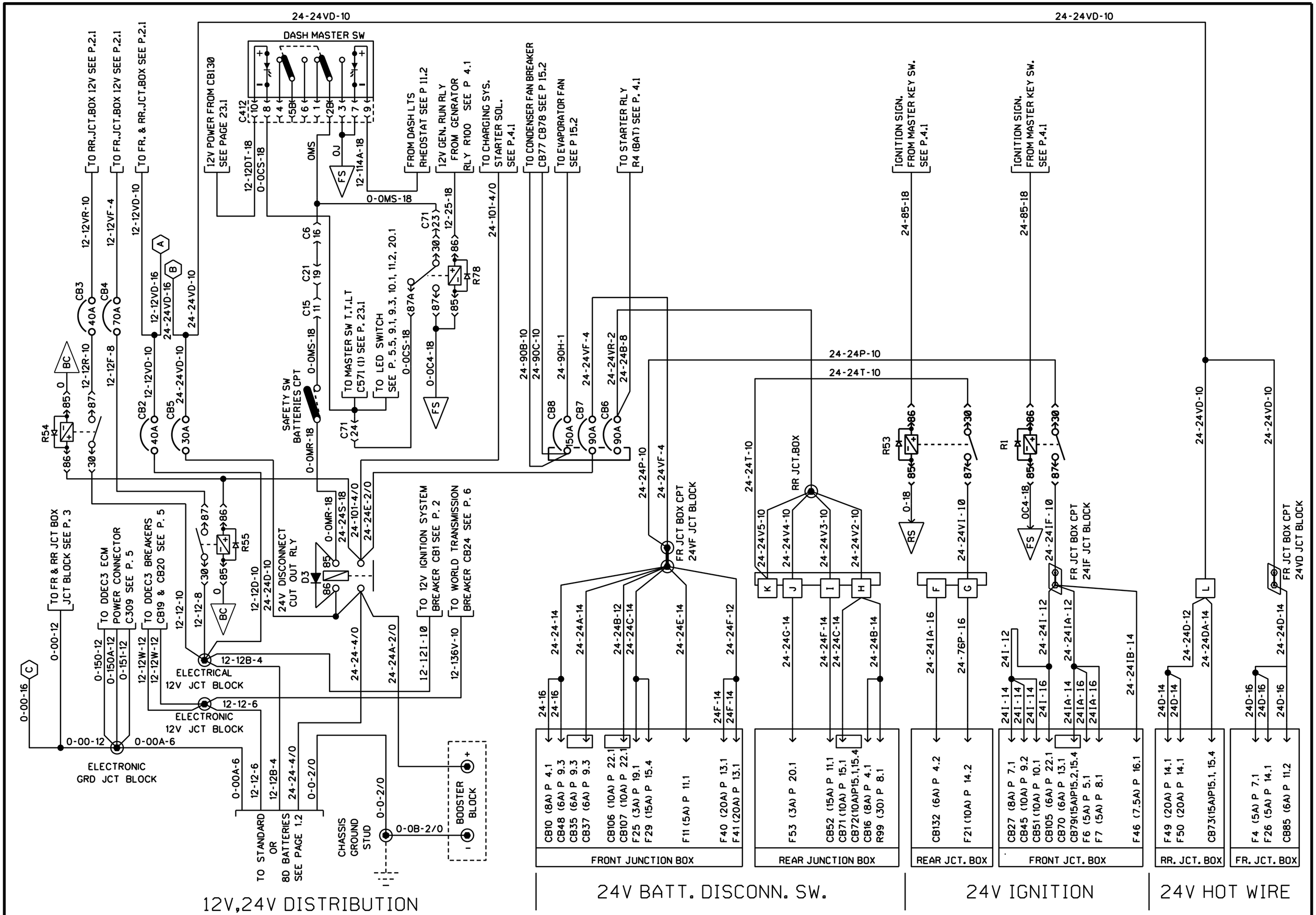

PREVOST | WIRING DIAGRAM | NO: D060912 | PAGE: 1.1 | REVISION 19