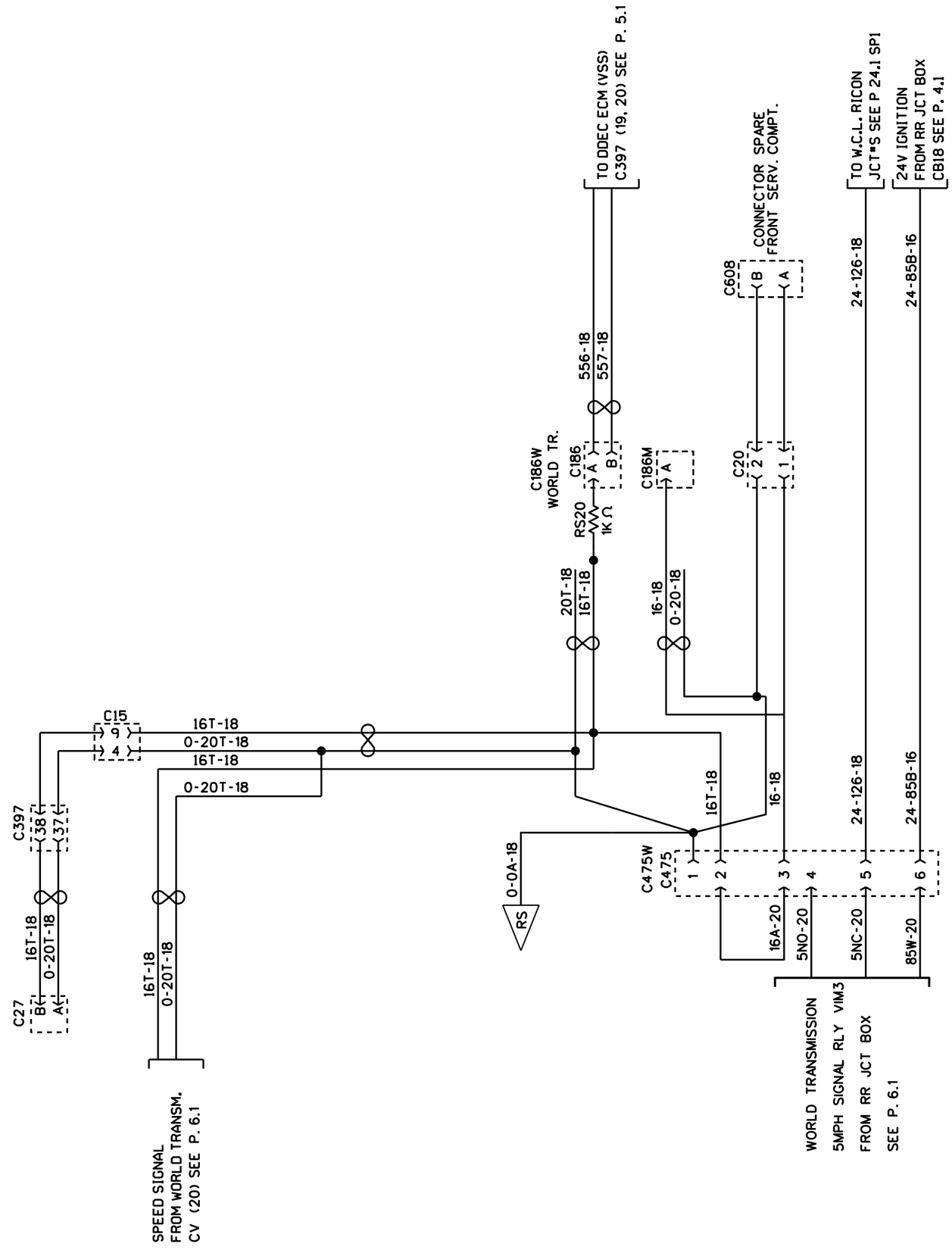

TRANSMISSION SPEED SIGNAL