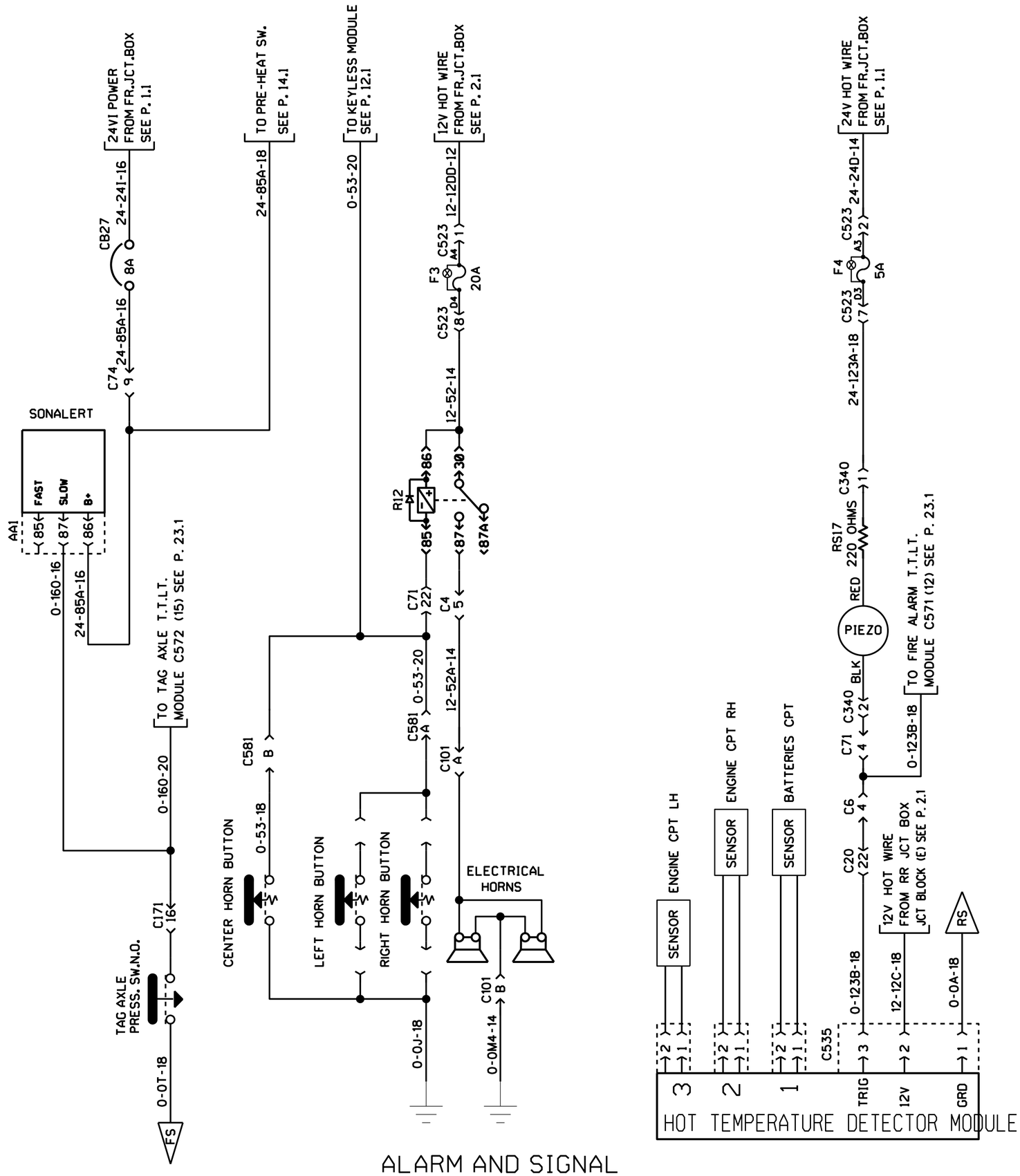

ALARM AND SIGNAL

PREVOST	WIRING DIAGRAM	NO: D060912	PAGE: 7.2	REVISION 09