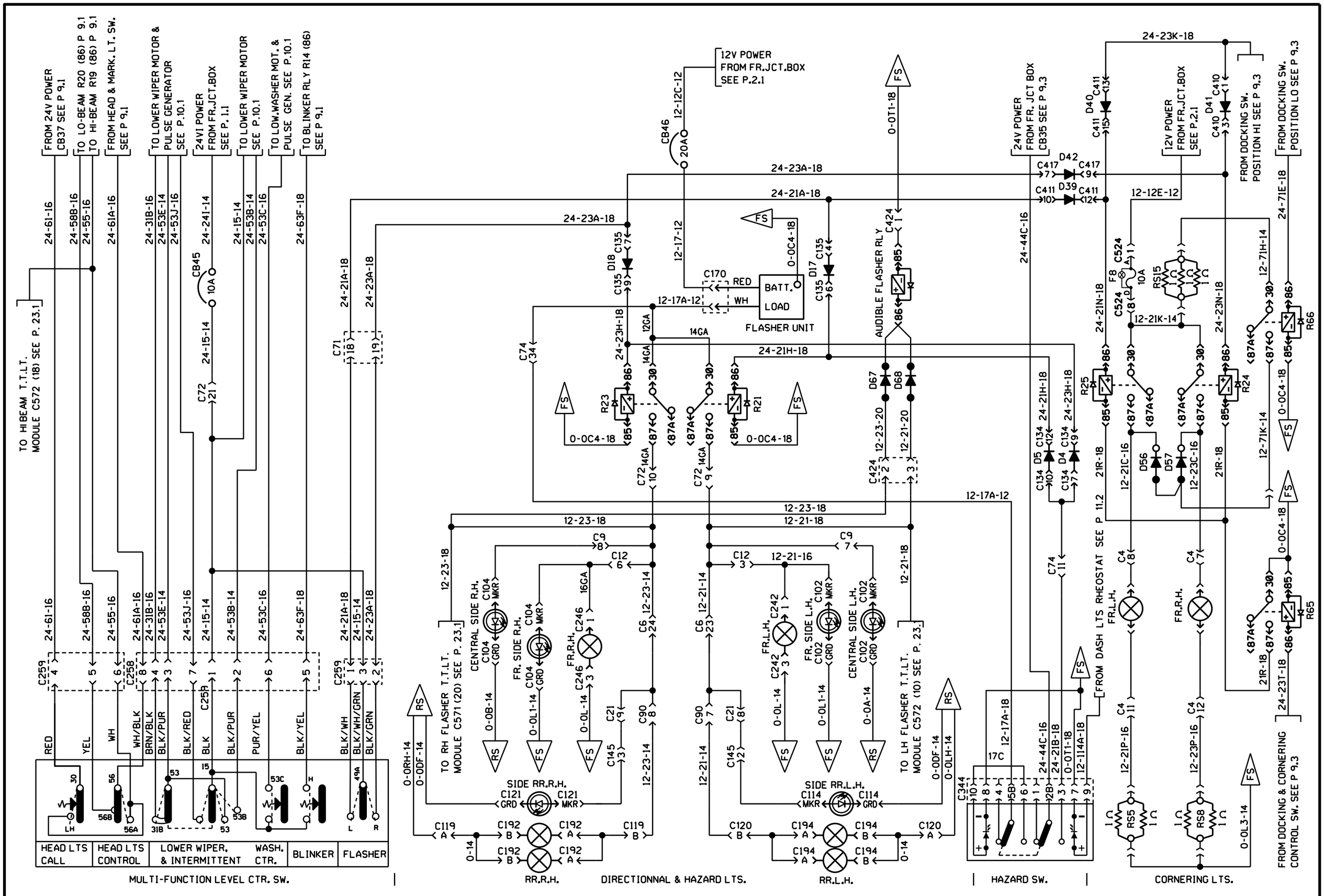

EXTERIOR LIGHTING

PREVOST	WIRING DIAGRAM	NO: D060912	PAGE: 9.2	REVISION 11