Lavatory and No Smoking sign

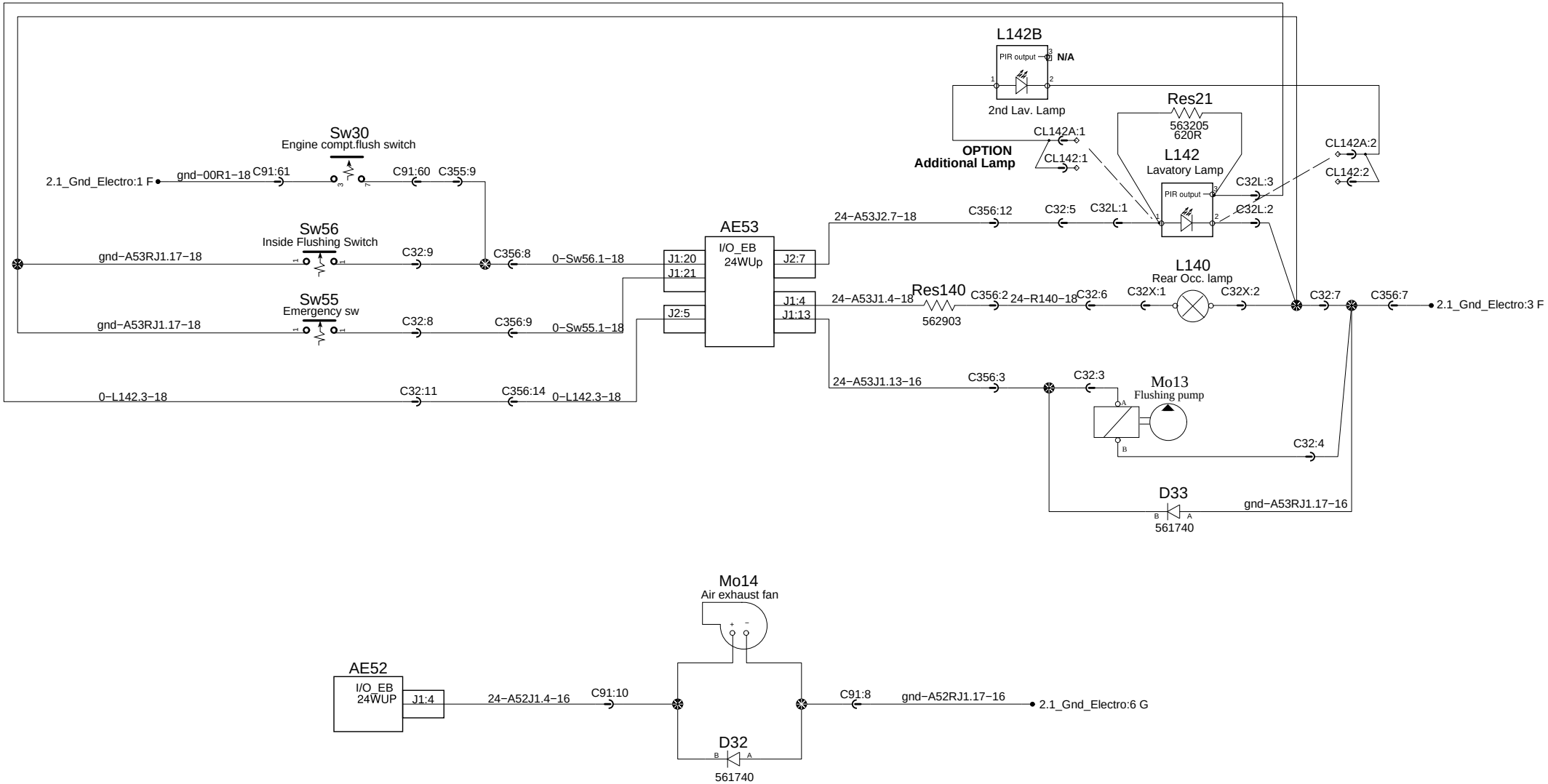

PREVOST®	WIRING DIAGRAM	No:D061550	Page:11.1 SP1	Rev:00