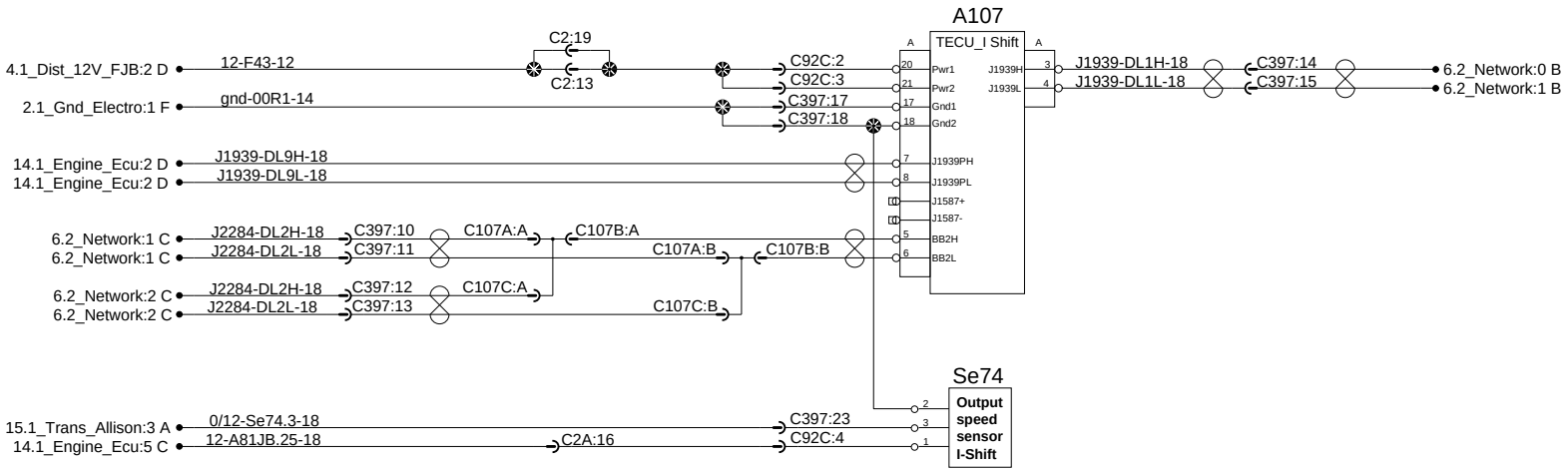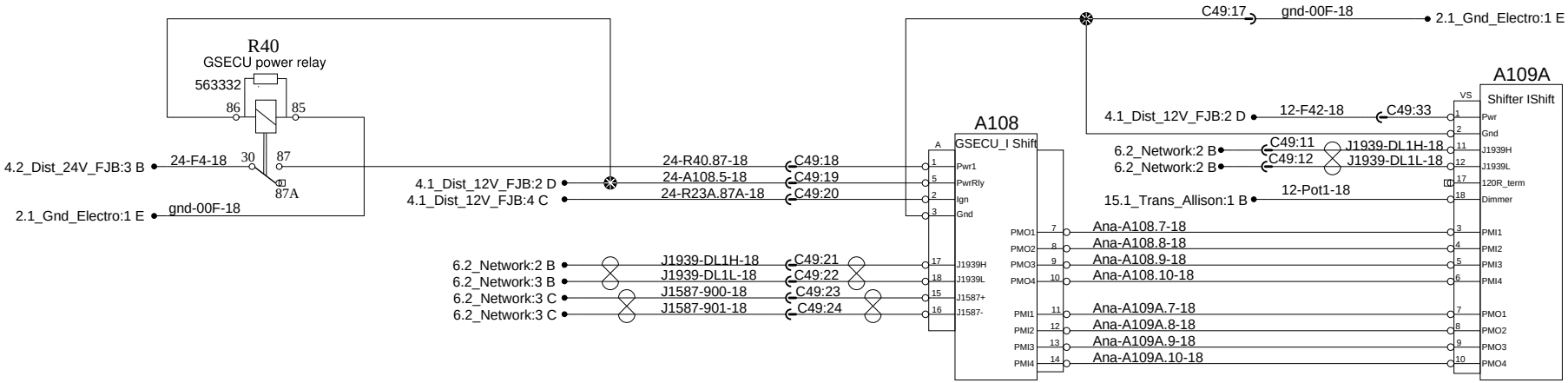Transmission I_Shift