# Driver assist

## (FCM-ACC-LDW)

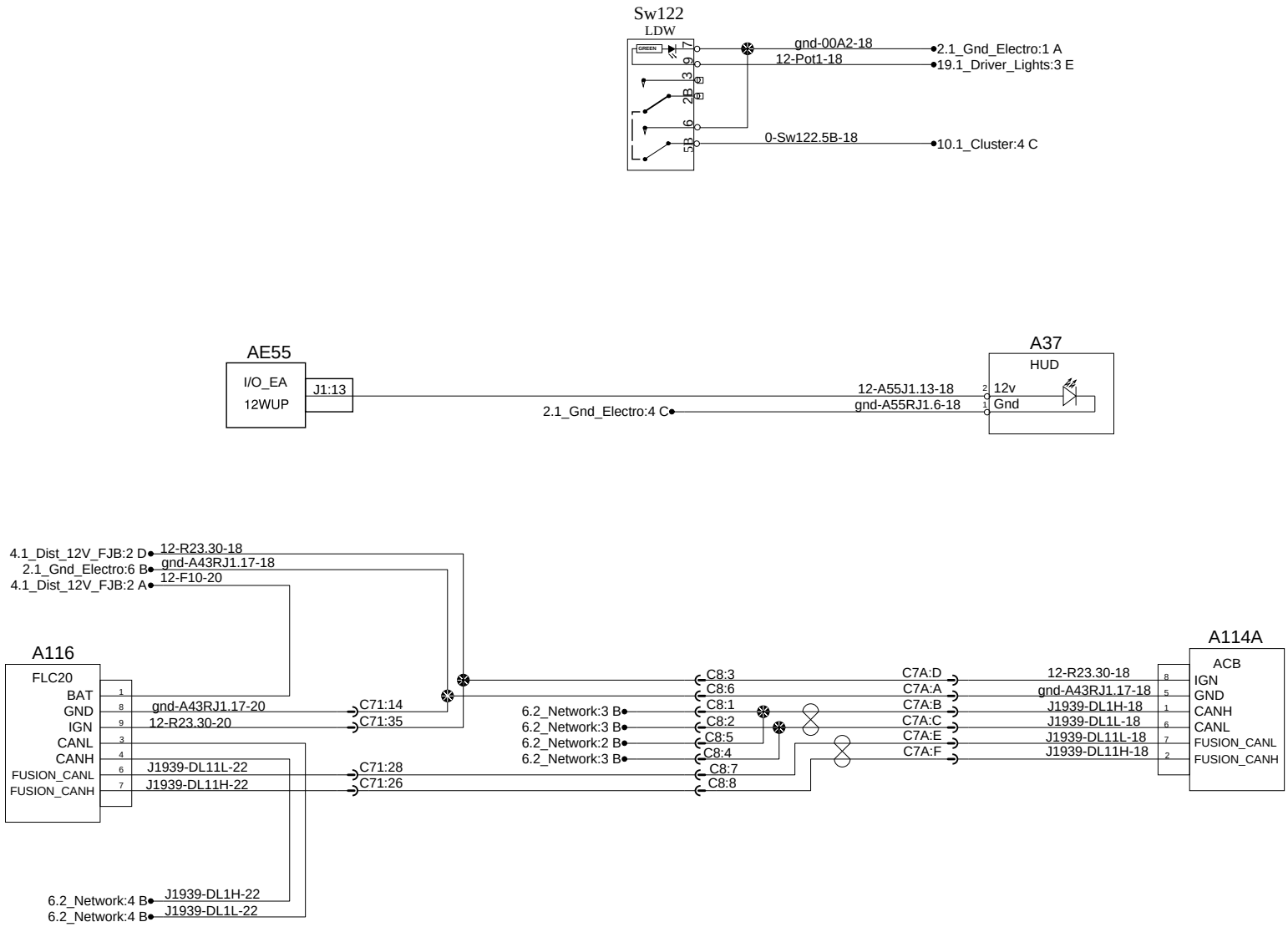


| PREVOST® | WIRING DIAGRAM | No:D061550 | Page:16.2 | Rev:25 |
|---|---|---|---|---|