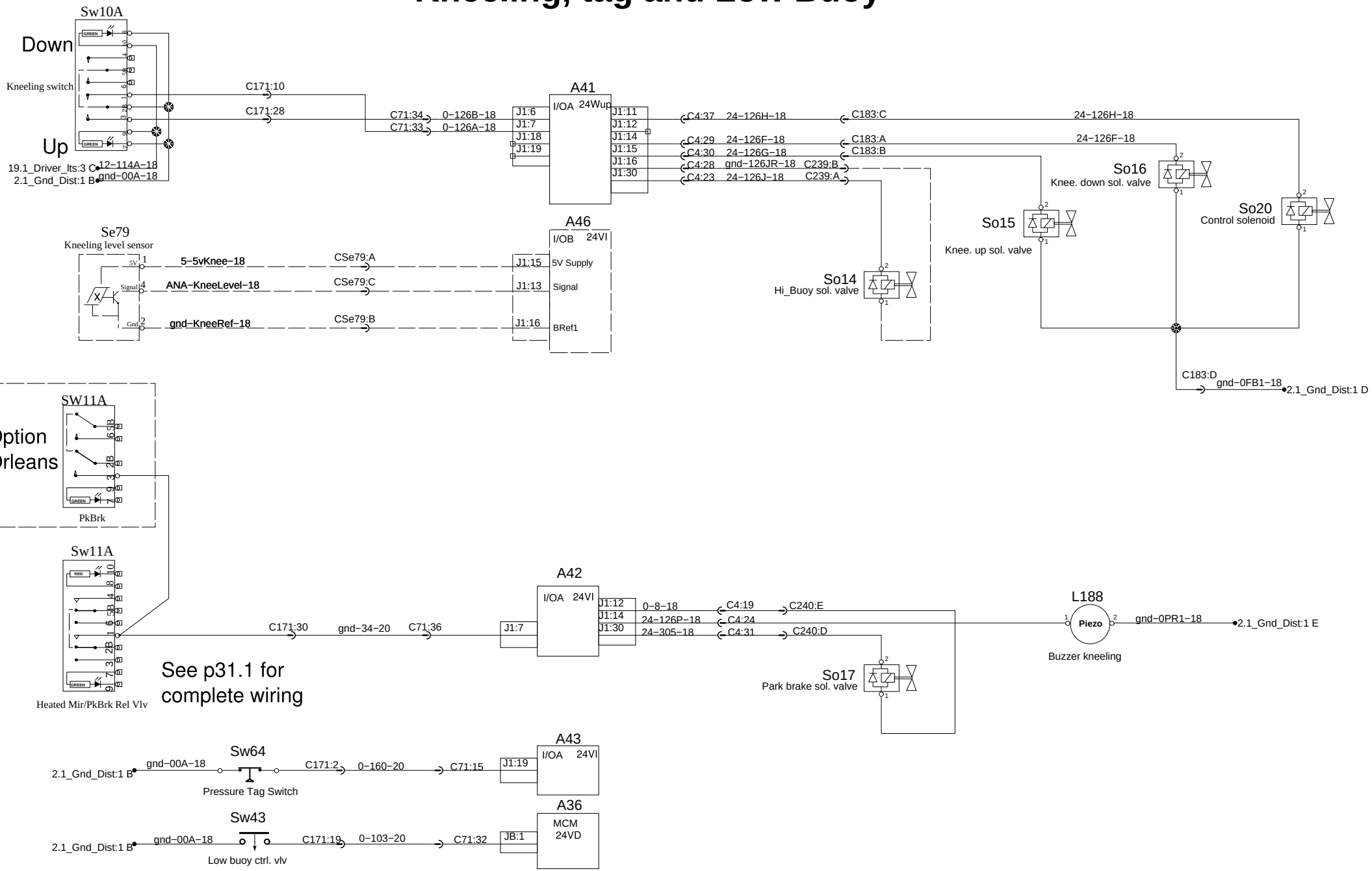Kneeling, tag and Low Buoy