NOTES 1) WITH "OUTPUT RETARDER" ON TRANSMISSION AUTOMATIC WORLD

2) N.O. = NORMALY OPEN
N.C. = NORMALY CLOSED

COLOR CODE FOR TUBES	
COLOR	CIRCUIT
RED	SECONDARY
GREEN	PRIMARY & SUPPLY
YELLOW	PARKING BRAKE
BLUE	SUSPENSION
BLACK	ACCESSORIES

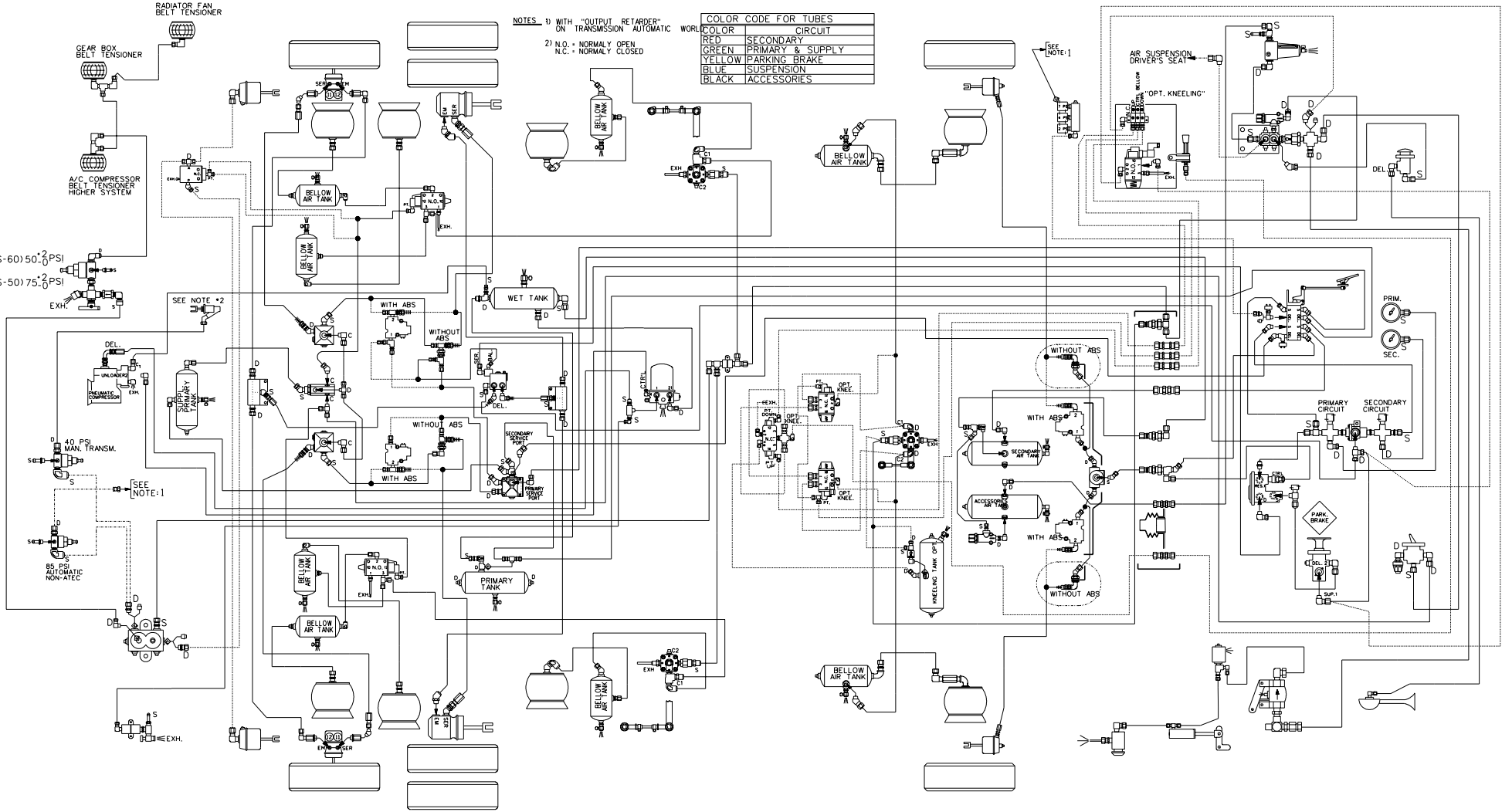

D140237 REV. H

COACH XL 40' & 45' SERIES 60
INDEPENDENT FRONT SUSPENSION (IFS)