Entrance door

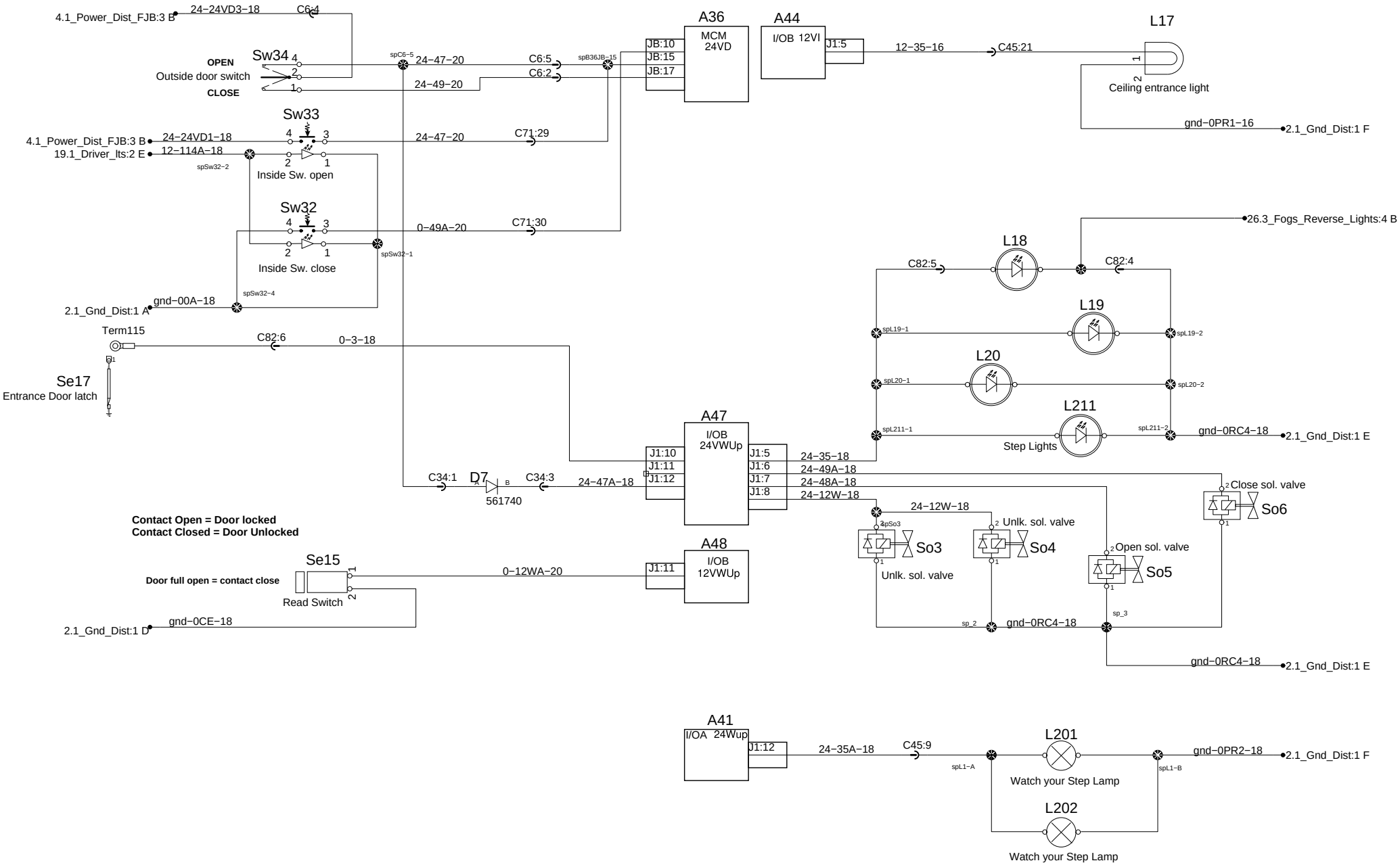

PREVOST®	WIRING DIAGRAM	No:D061340	Page:29.1	Rev:0