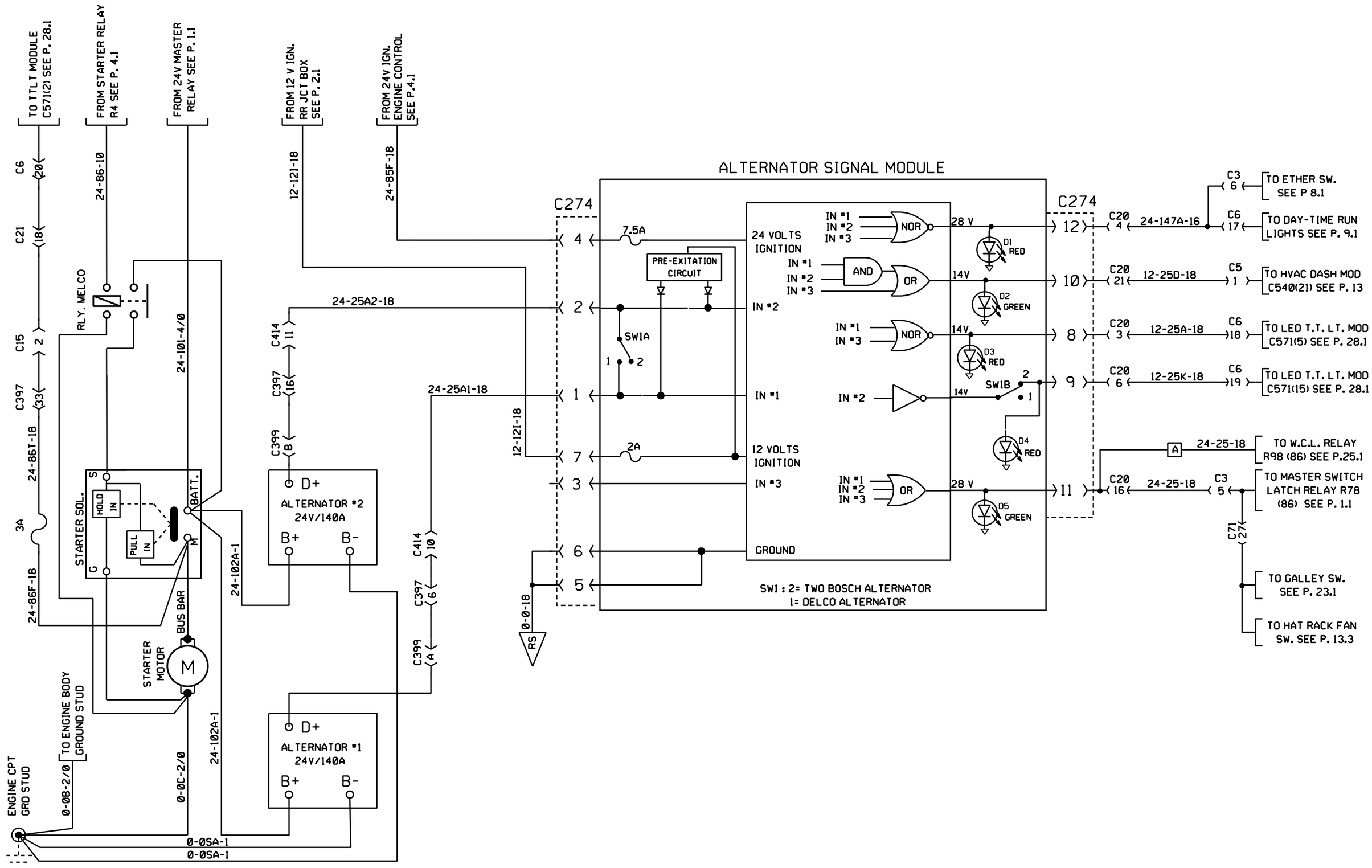

STARTER & BOSCH ALTERNATOR

PREVOST	WIRING DIAGRAM	NO: D060949	PAGE: 4.2	REVISION 26