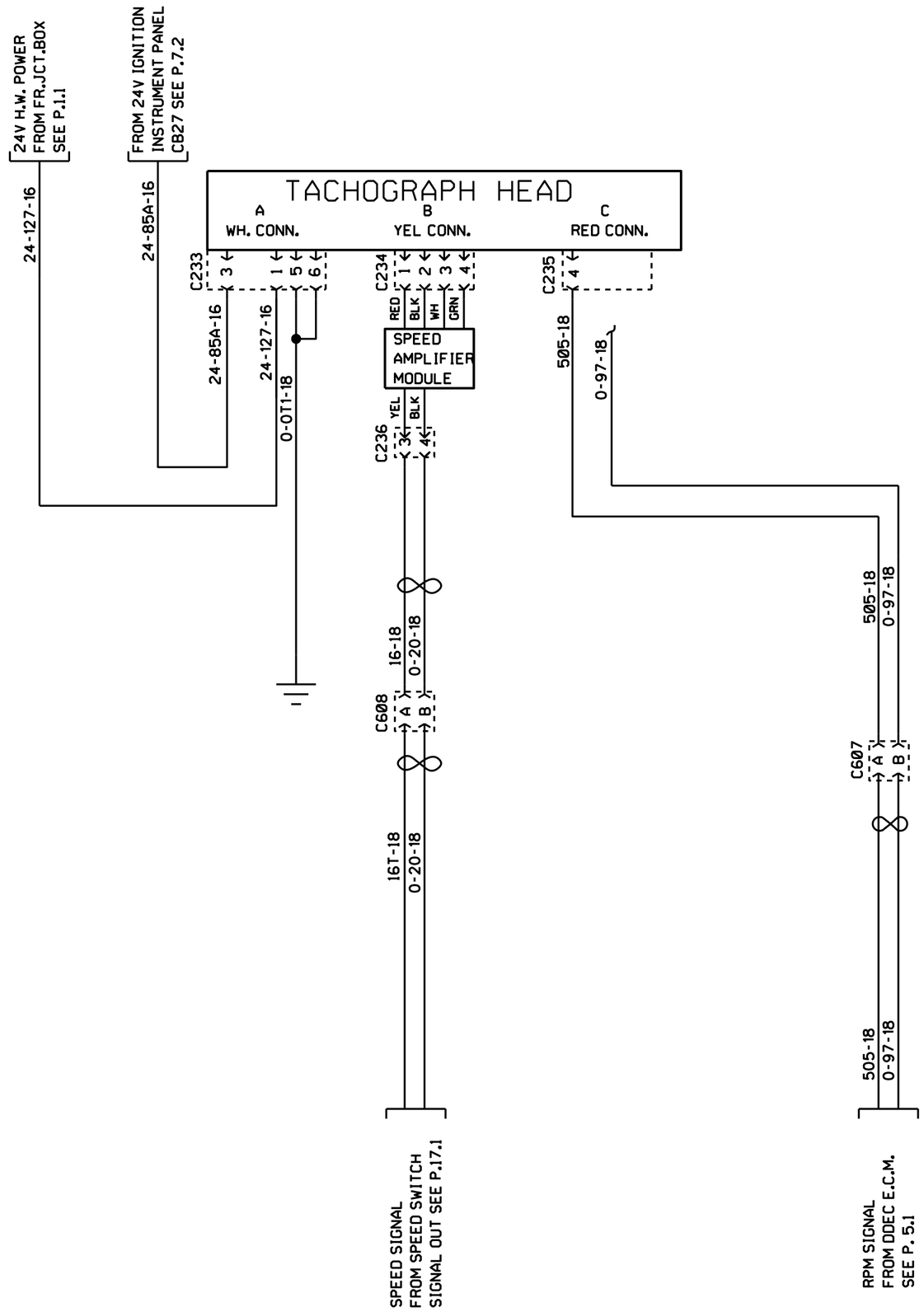

ELECTRONIC TACHOGRAPH