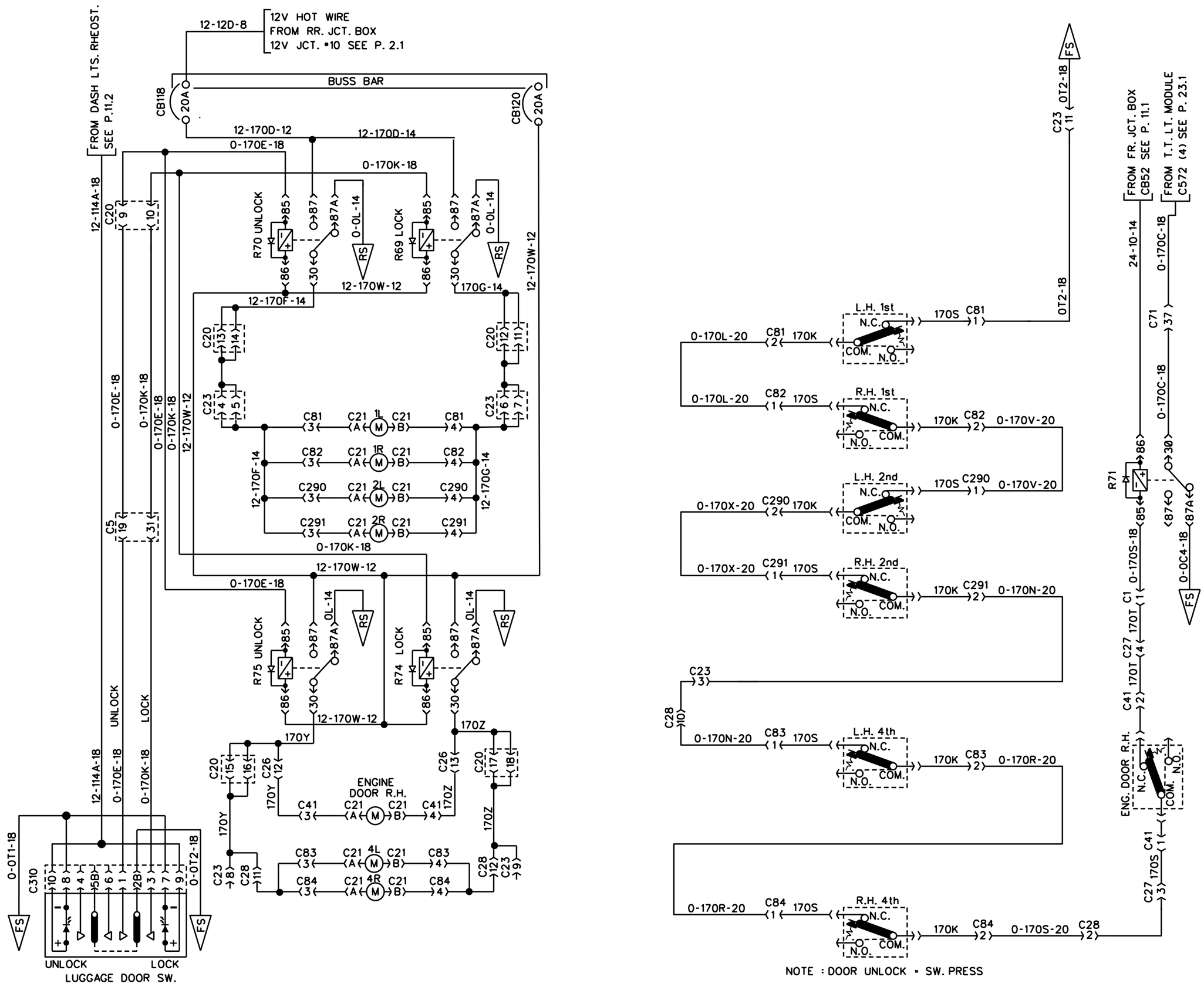

LUGGAGE DOOR LOCK

PREVOST	WIRING DIAGRAM	NO: D060938	PAGE: 12.1	REVISION 15