Driver lights

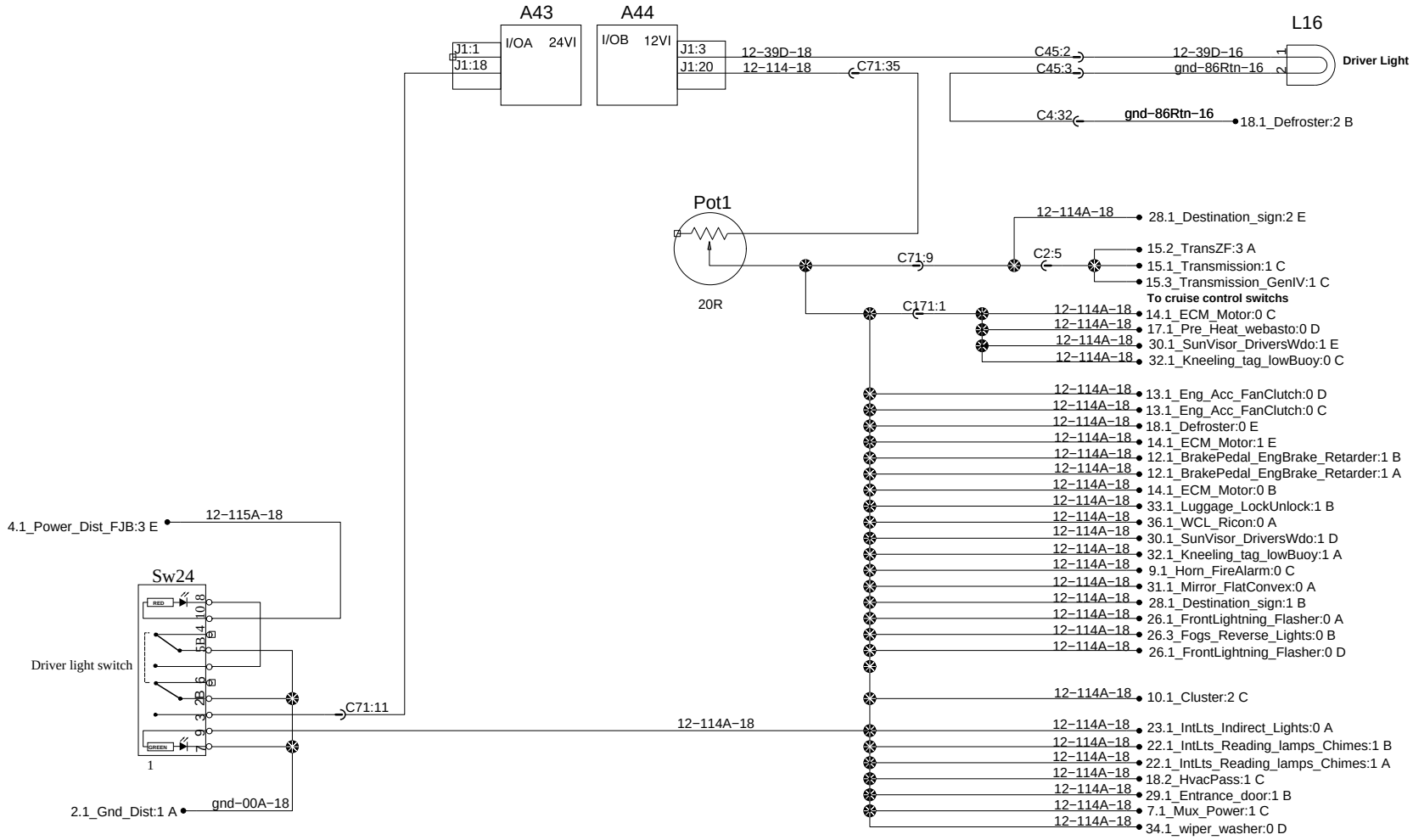

PREVOST®	WIRING DIAGRAM	No:D061030	Page:19.1	Rev:08