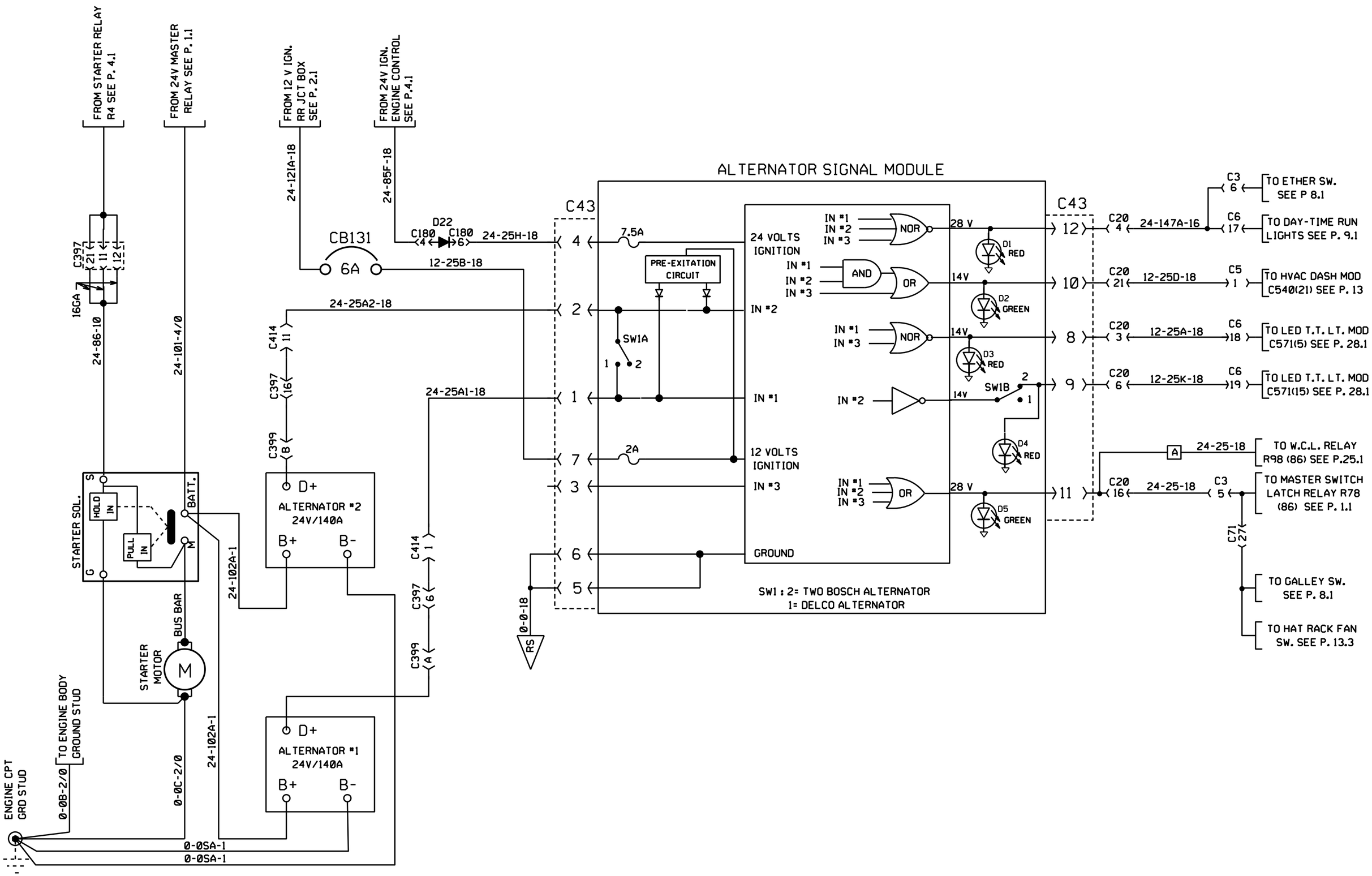

STARTER & BOSCH ALTERNATOR

PREVOST	WIRING DIAGRAM	NO: D060902	PAGE: 4.2	REVISION 21