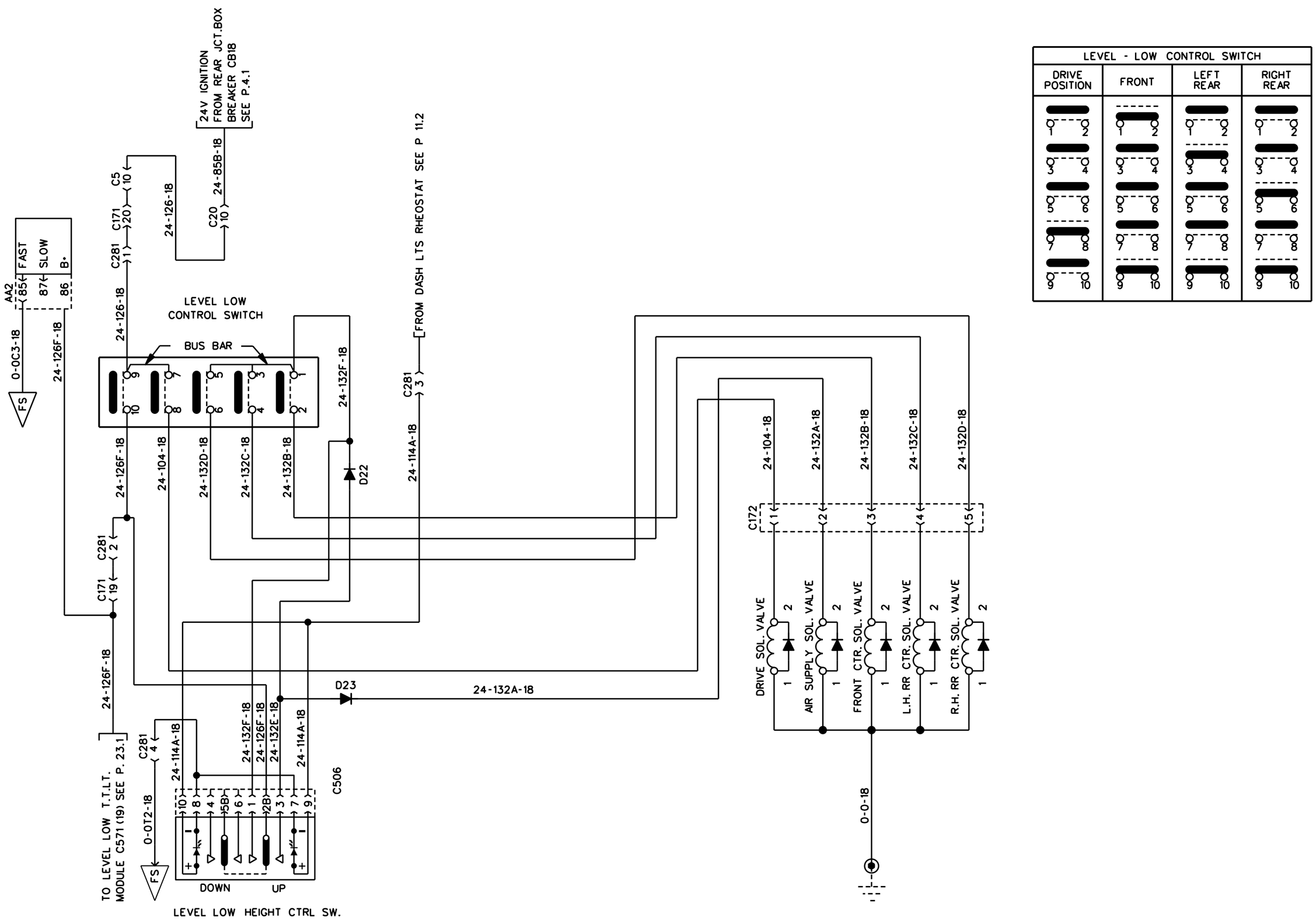

LEVEL - LOW SYSTEM