Cluster

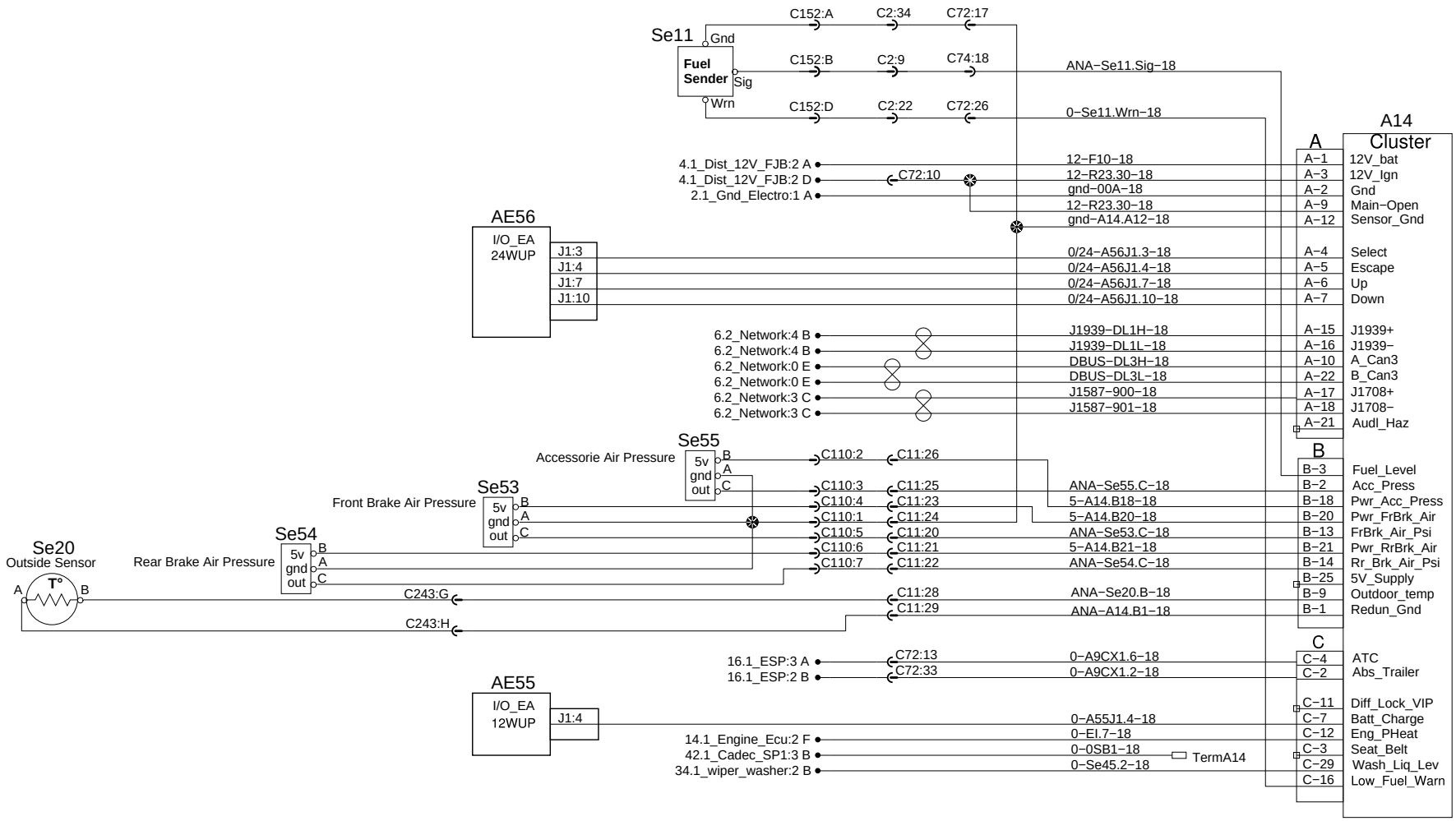
Se11
Gnd
Fuel Sender
Sig
Wrn
C152:A
C2:34
C72:17
C152:B
C2:9
C74:18
C152:D
C2:22
C72:26
ANA−Se11.Sig−18
0−Se11.Wrn−18
A14
Cluster
A
4.1_Dist_12V_FJB:2 A
4.1_Dist_12V_FJB:2 D
2.1_Gnd_Electro:1 A
C72:10
12−F10−18
12−R23.30−18
gnd−00A−18
12−R23.30−18
gnd−A14.A12−18
A−1 12V_bat
A−3 12V_Ign
A−2 Gnd
A−9 Main−Open
A−12 Sensor_Gnd
AE56
I/O_EA
24WUP
J1:3
J1:4
J1:7
J1:10
0/24−A56J1.3−18
0/24−A56J1.4−18
0/24−A56J1.7−18
0/24−A56J1.10−18
A−4 Select
A−5 Escape
A−6 Up
A−7 Down
6.2_Network:4 B
6.2_Network:4 B
6.2_Network:0 E
6.2_Network:0 E
6.2_Network:3 C
6.2_Network:3 C
J1939−DL1H−18
J1939−DL1L−18
DBUS−DL3H−18
DBUS−DL3L−18
J1587−900−18
J1587−901−18
A−15 J1939+
A−16 J1939−
A−10 A_Can3
A−22 B_Can3
A−17 J1708+
A−18 J1708−
A−21 Audl_Haz
Se55
Accessorie Air Pressure
5v
gnd
out
B
A
C
C110:2
C11:26
B
B−3 Fuel_Level
B−2 Acc_Press
B−18 Pwr_Acc_Press
B−20 Pwr_FrBrk_Air
B−13 FrBrk_Air_Psi
B−21 Pwr_RrBrk_Air
B−14 Rr_Brk_Air_Psi
B−25 5V_Supply
B−9 Outdoor_temp
B−1 Redun_Gnd
Se53
Front Brake Air Pressure
C110:3
C110:4
C110:1
C110:5
C110:6
C110:7
C11:25
C11:23
C11:24
C11:20
C11:21
C11:22
ANA−Se55.C−18
5−A14.B18−18
5−A14.B20−18
ANA−Se53.C−18
5−A14.B21−18
ANA−Se54.C−18
Se54
Rear Brake Air Pressure
Se20
Outside Sensor
T°
A
B
C243:G
C243:H
C11:28
C11:29
ANA−Se20.B−18
ANA−A14.B1−18
C
16.1_ESP:3 A
16.1_ESP:2 B
C72:13
C72:33
0−A9CX1.6−18
0−A9CX1.2−18
C−4 ATC
C−2 Abs_Trailer
AE55
I/O_EA
12WUP
J1:4
0−A55J1.4−18
14.1_Engine_Ecu:2 F
42.1_Cadec_SP1:3 B
34.1_wiper_washer:2 B
0−EI.7−18
0−0SB1−18
0−Se45.2−18
TermA14
C−11 Diff_Lock_VIP
C−7 Batt_Charge
C−12 Eng_PHeat
C−3 Seat_Belt
C−29 Wash_Liq_Lev
C−16 Low_Fuel_Warn