Wipers and washer

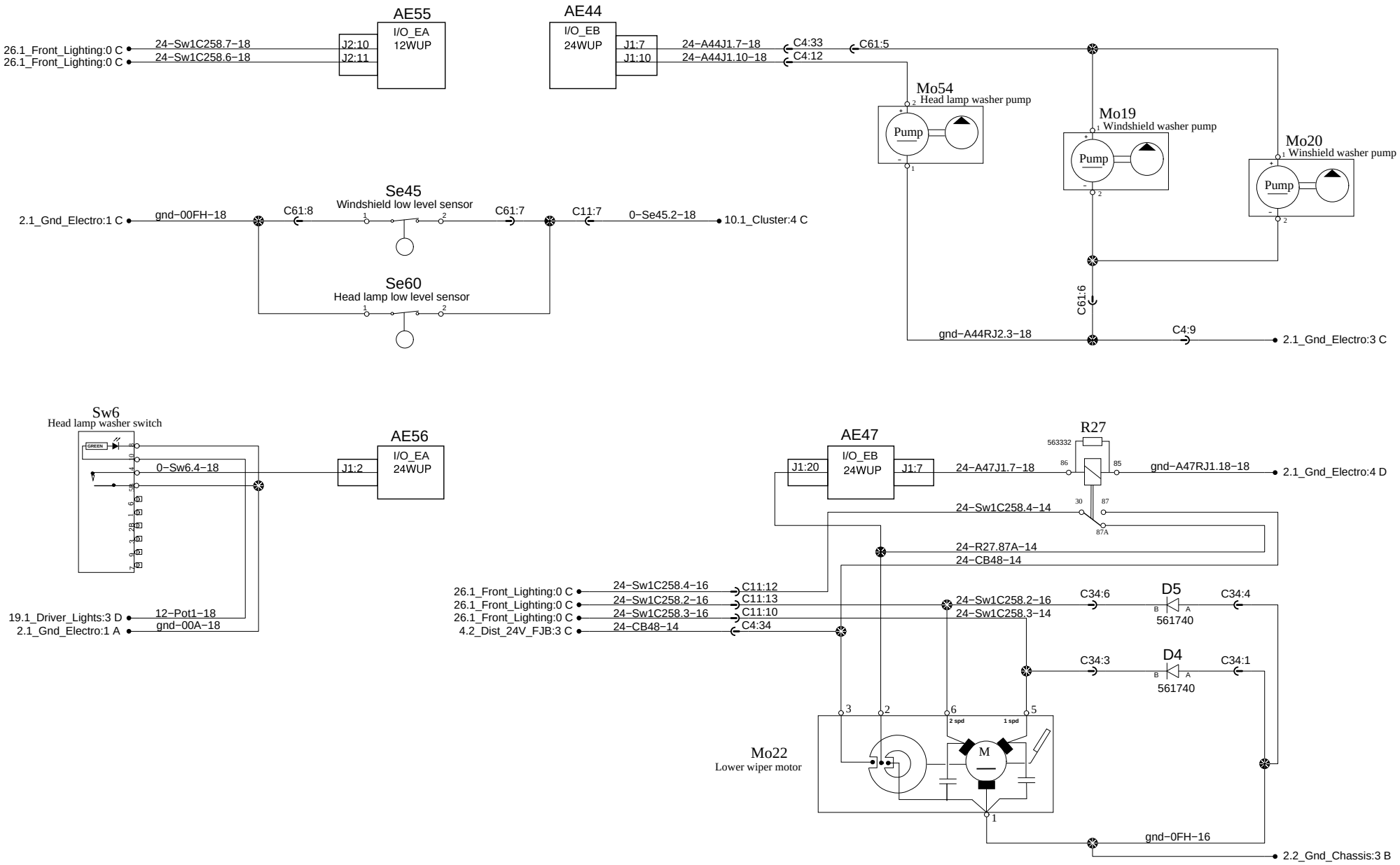

PREVOST®	WIRING DIAGRAM	No:D061670	Page:34.1	Rev:1