Ramco Mirror 2 Adjustment Switch and Heated

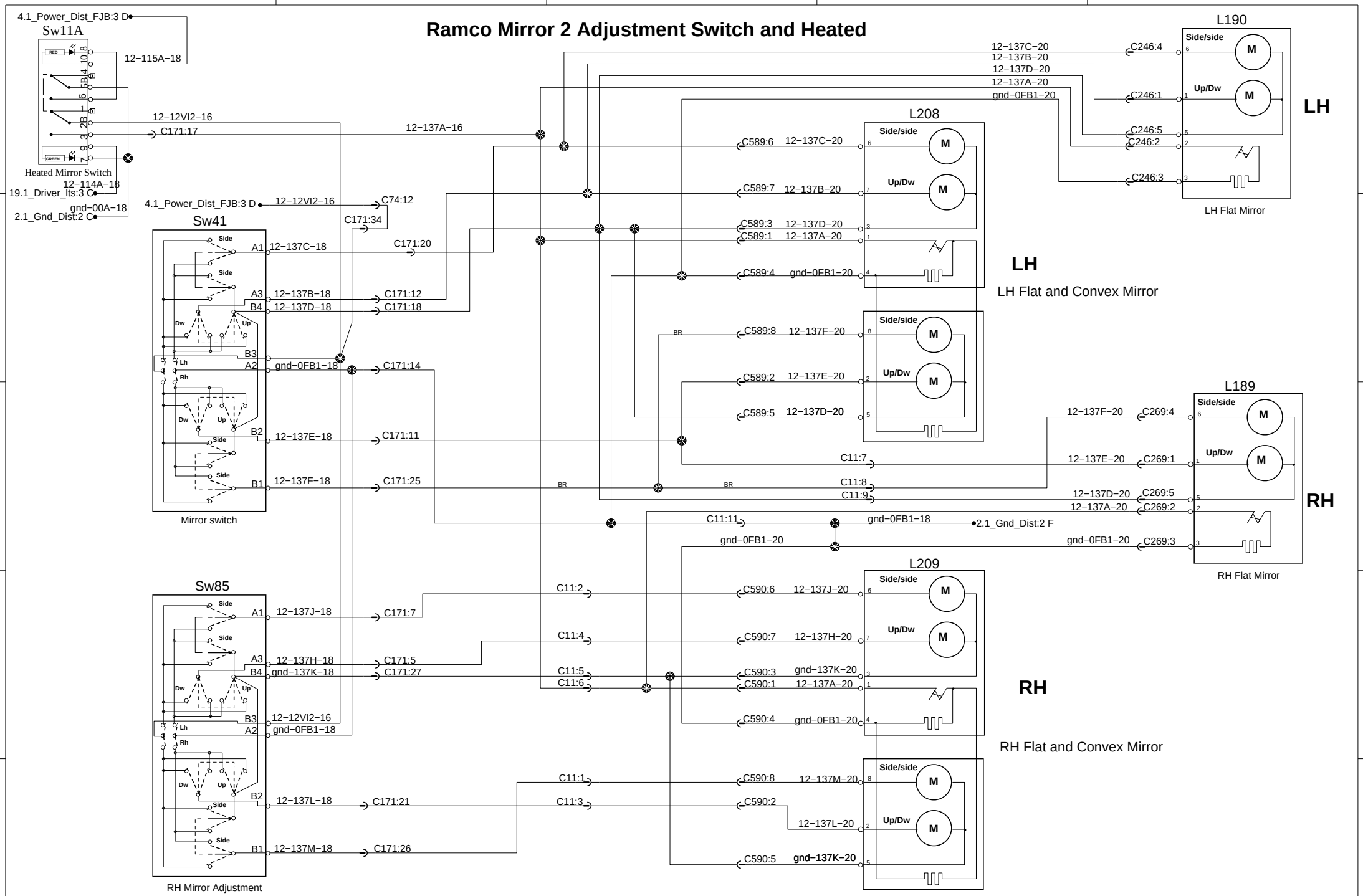

PREVOST®	WIRING DIAGRAM	No:D061040	Page:31.1	Rev:11