Kneeling, tag and low buoy control

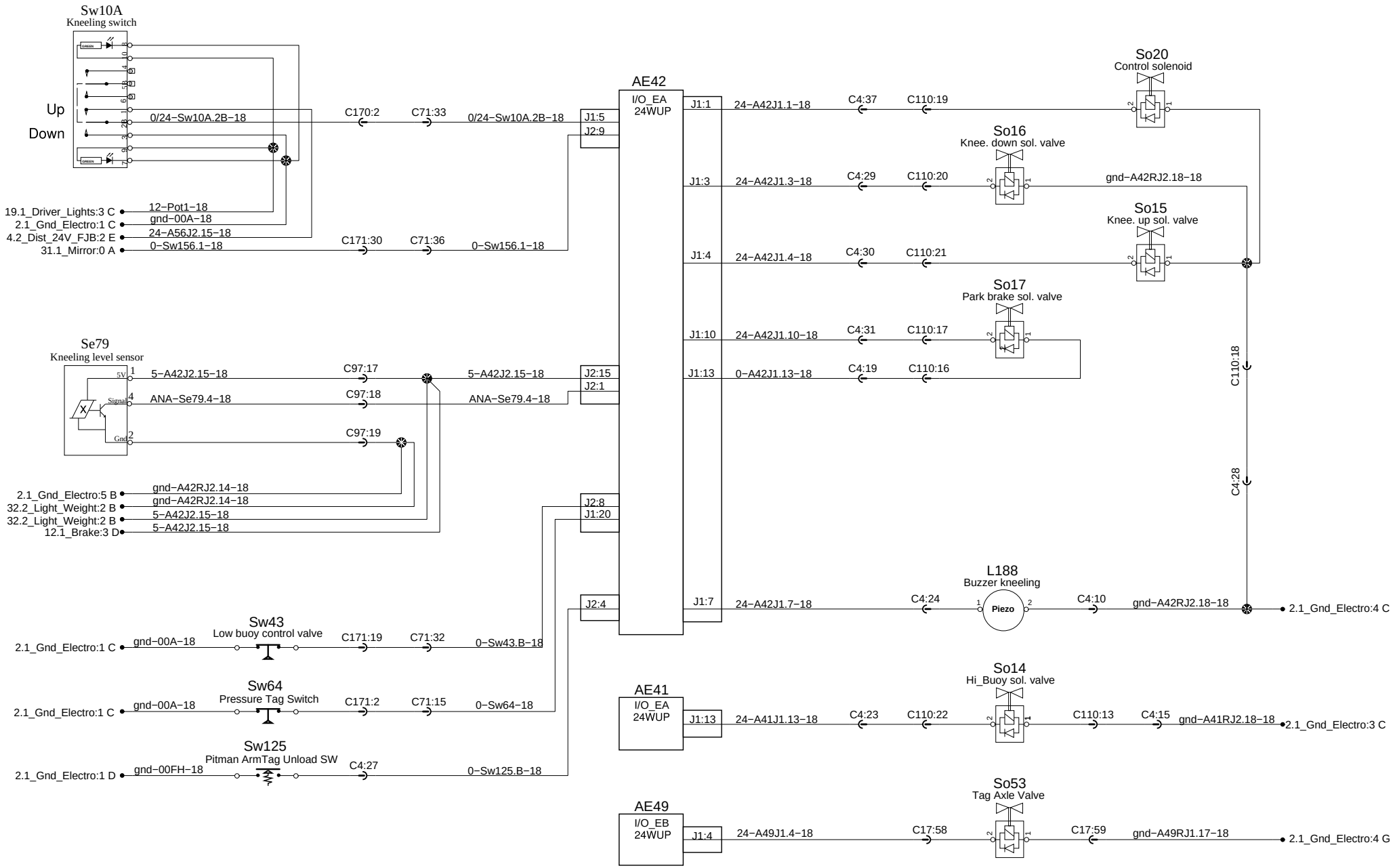

PREVOST®	WIRING DIAGRAM	No:D061550	Page:32.1	Rev:5