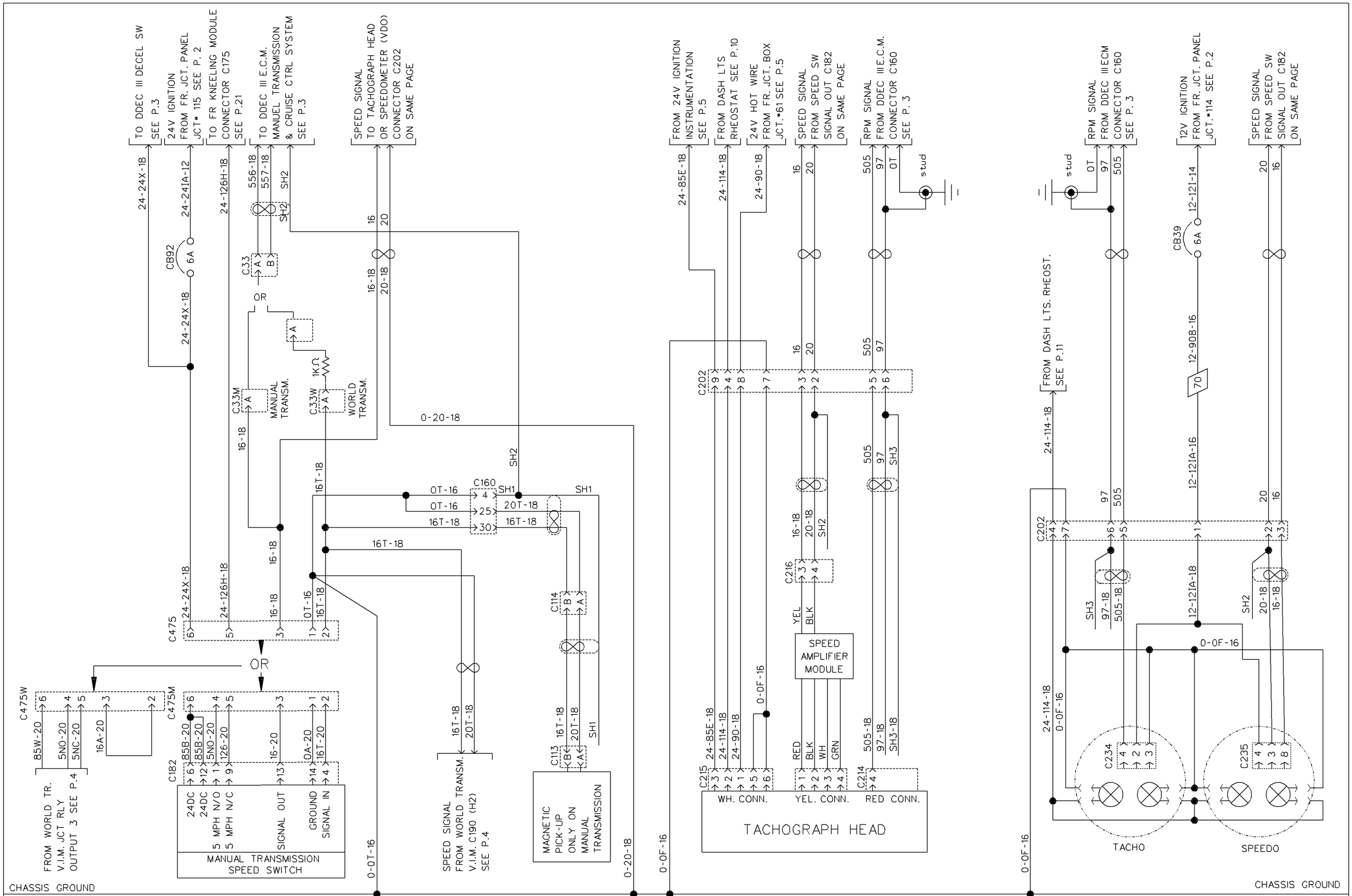

SPEED SIGNAL | ELECTRONIC TACHOGRAPH ELECT III | TACHO. & SPEEDO. VDO

PREVOST CAR inc. | WIRING DIAGRAM | NO: D060871 | P. 19 | REVISION 018