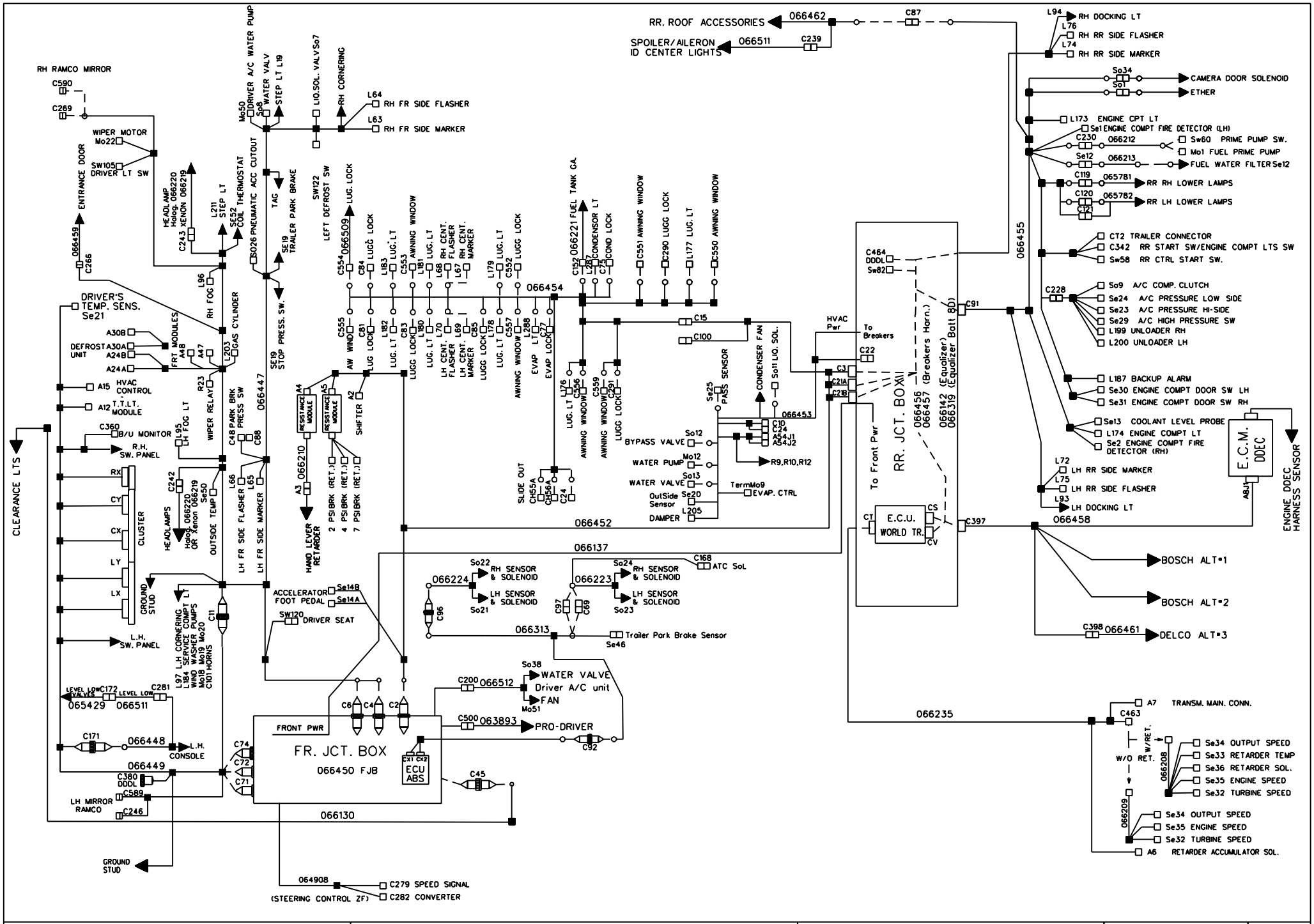

PREVOST	WIRING DIAGRAM VIP MUX	NO: D061040	PAGE: C1	REVISION 01