Multiplex Can, J1587, 1939 network and addressing

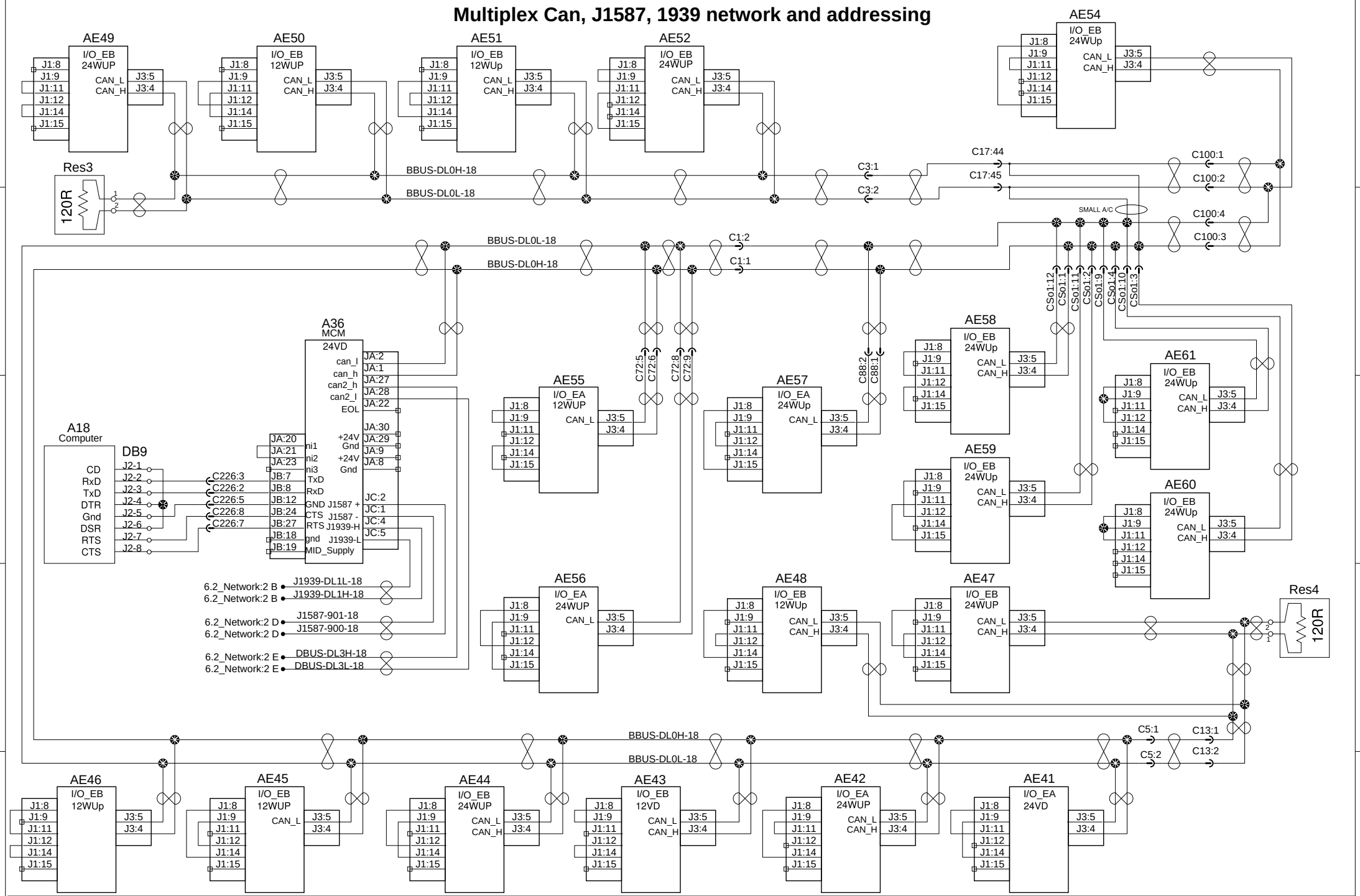

PREVOST®	WIRING DIAGRAM	No:D061760	Page:6.1	Rev:0