Automatic fire suppression system

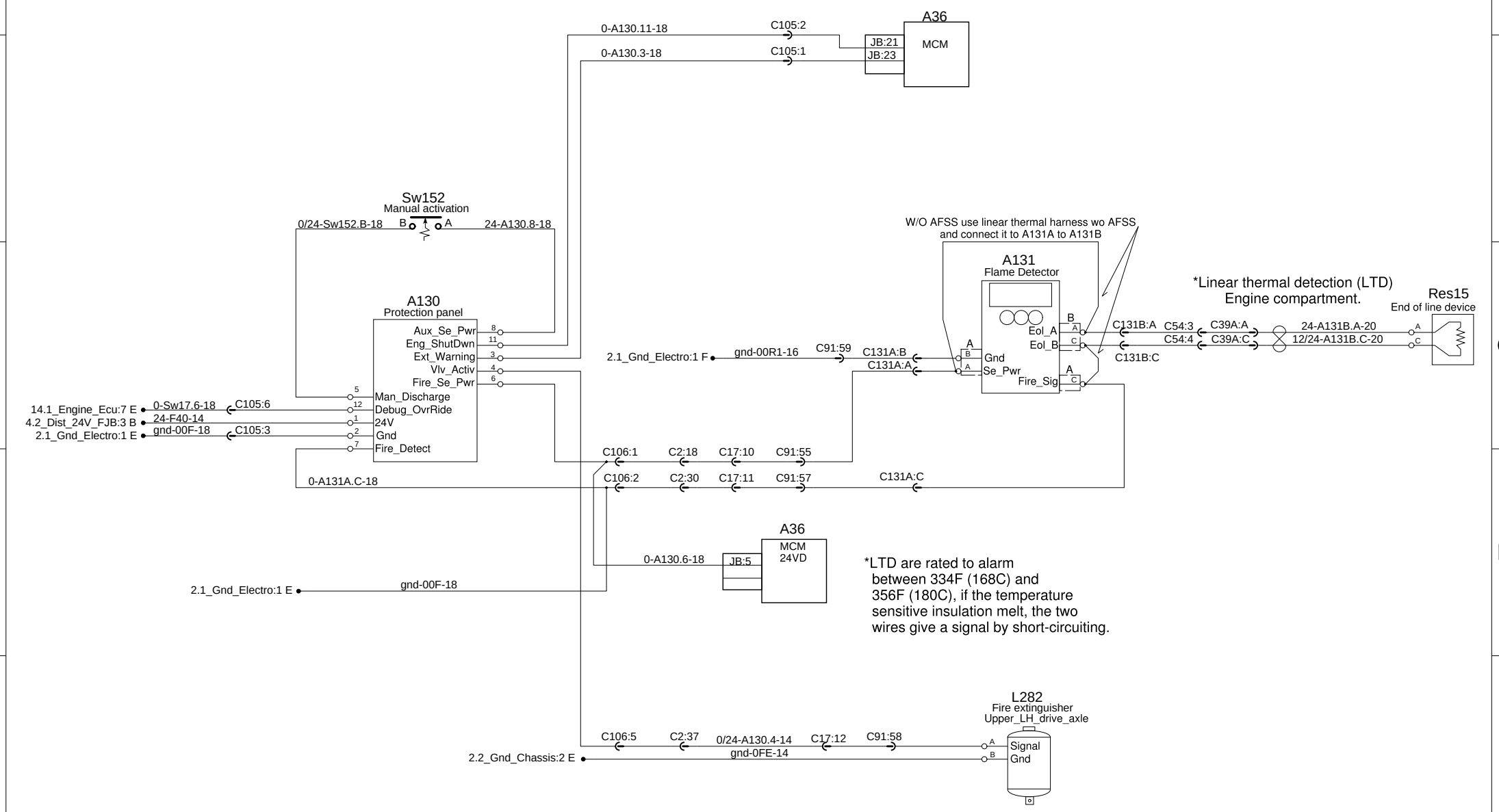

PREVOST®	WIRING DIAGRAM	No:D061760	Page:38.1	Rev:0