Engine and RJB lighting

Customer Adaptation of luggages compartment lighting

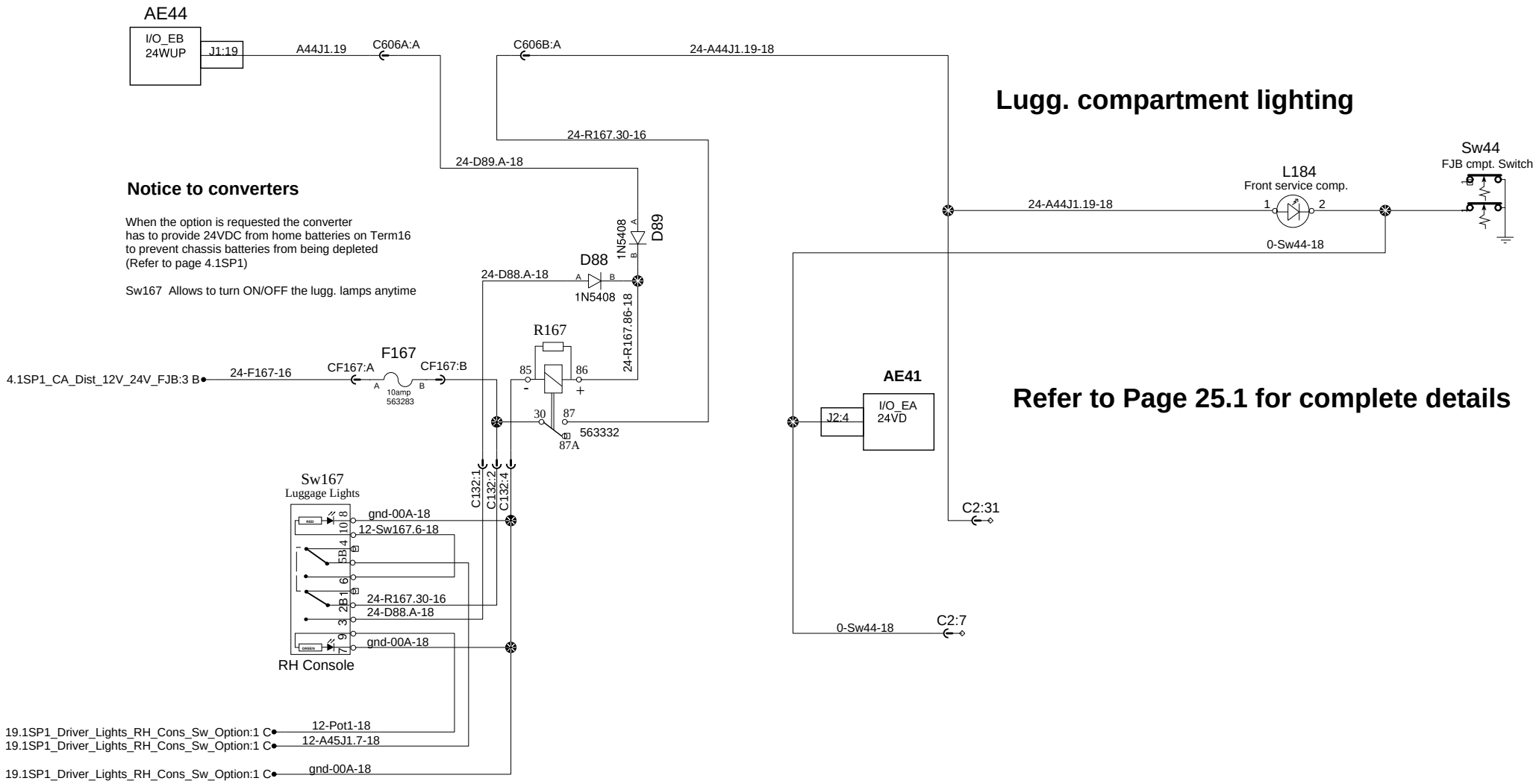

Notice to converters

When the option is requested the converter has to provide 24VDC from home batteries on Term16 to prevent chassis batteries from being depleted (Refer to page 4.1SP1)

Sw167 Allows to turn ON/OFF the lugg. lamps anytime