24V Power distribution front junction box

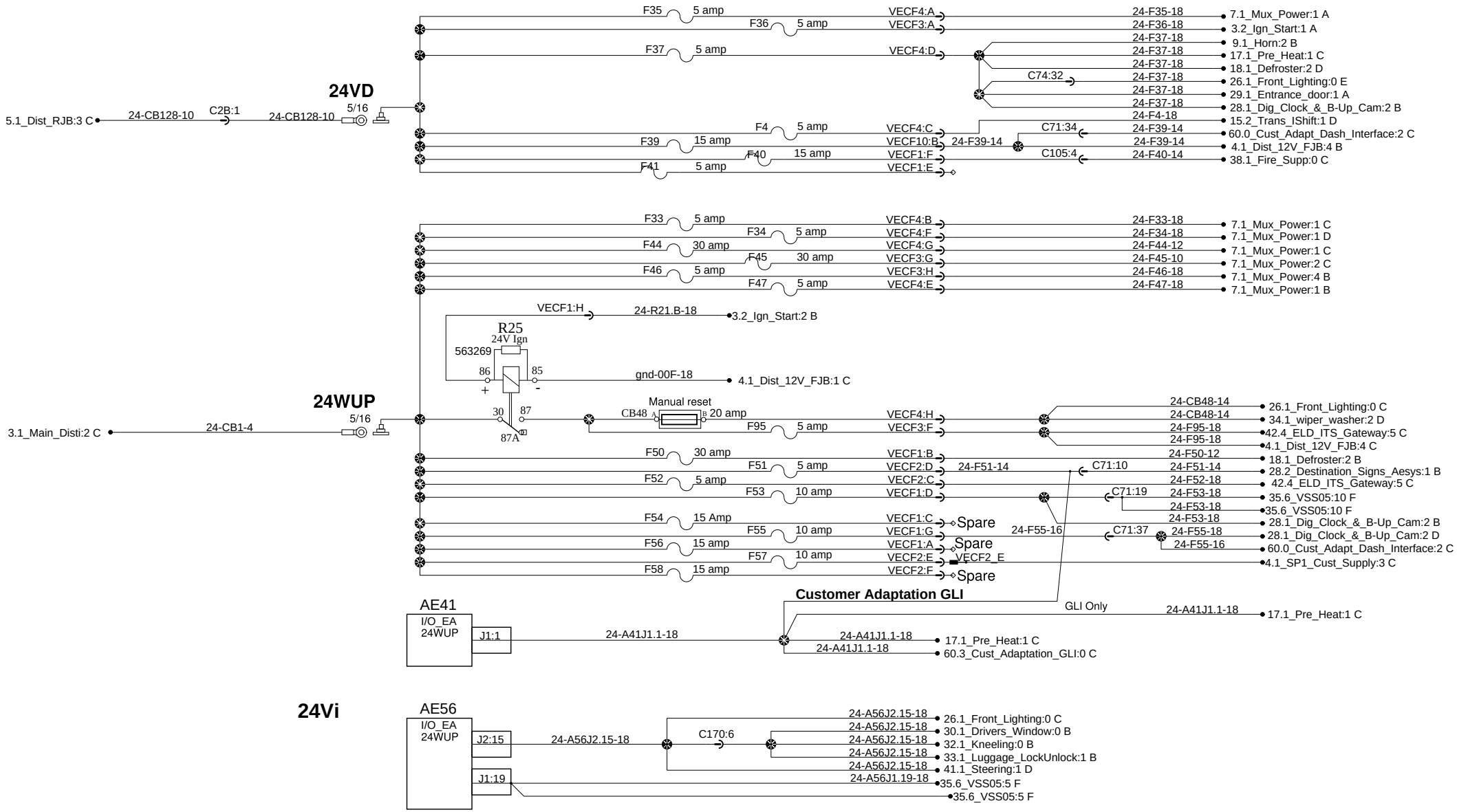

PREVOST®	WIRING DIAGRAM	No:D061550	Page:4.2	Rev:14