Tire pressure monitoring system

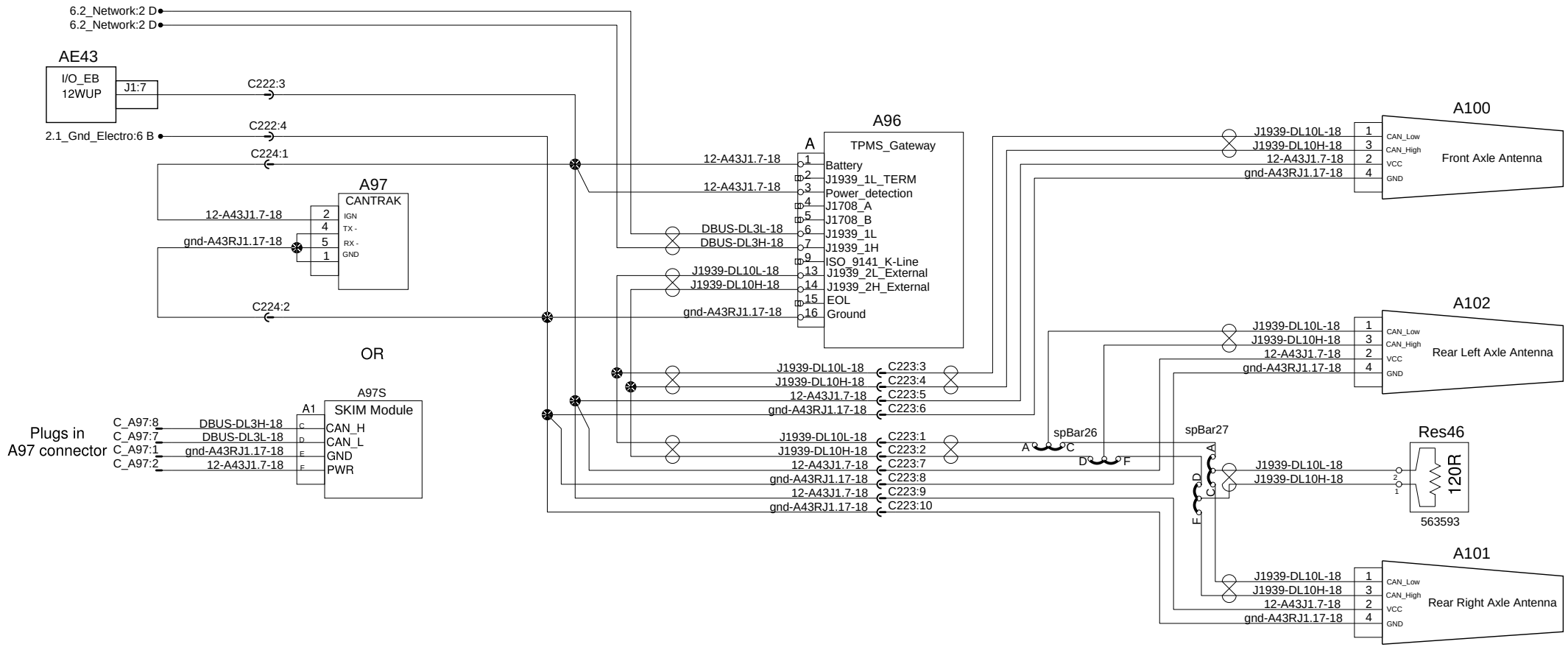

PREVOST®	WIRING DIAGRAM	No:D061640	Page:39.1	Rev:13