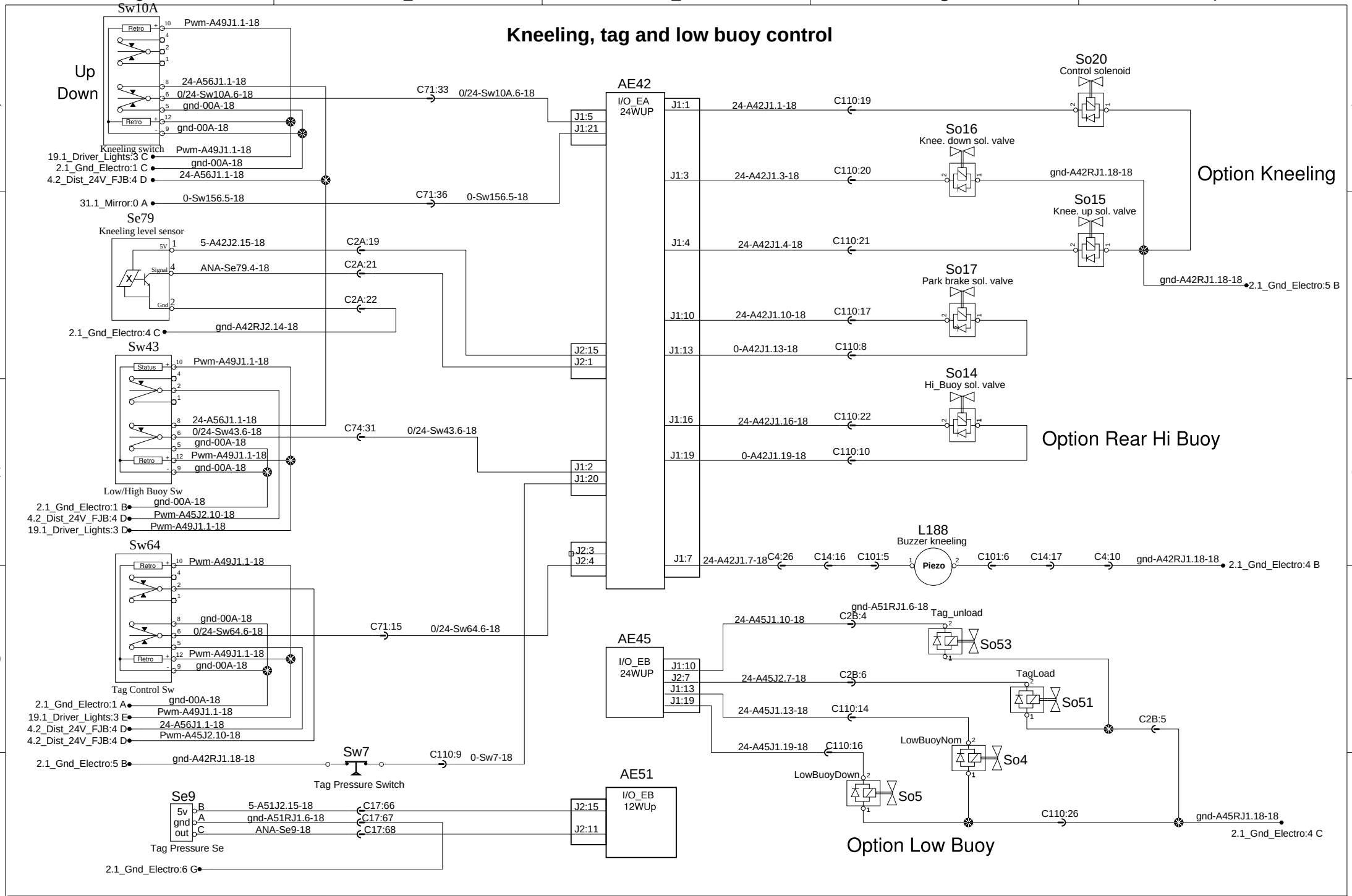

PREVOST®	WIRING DIAGRAM	No:D062140	Page:32.1	Rev:0