CTGI - Customer Telematic Gateway Interface
Saucon Prox , Optional Camera and WiFi

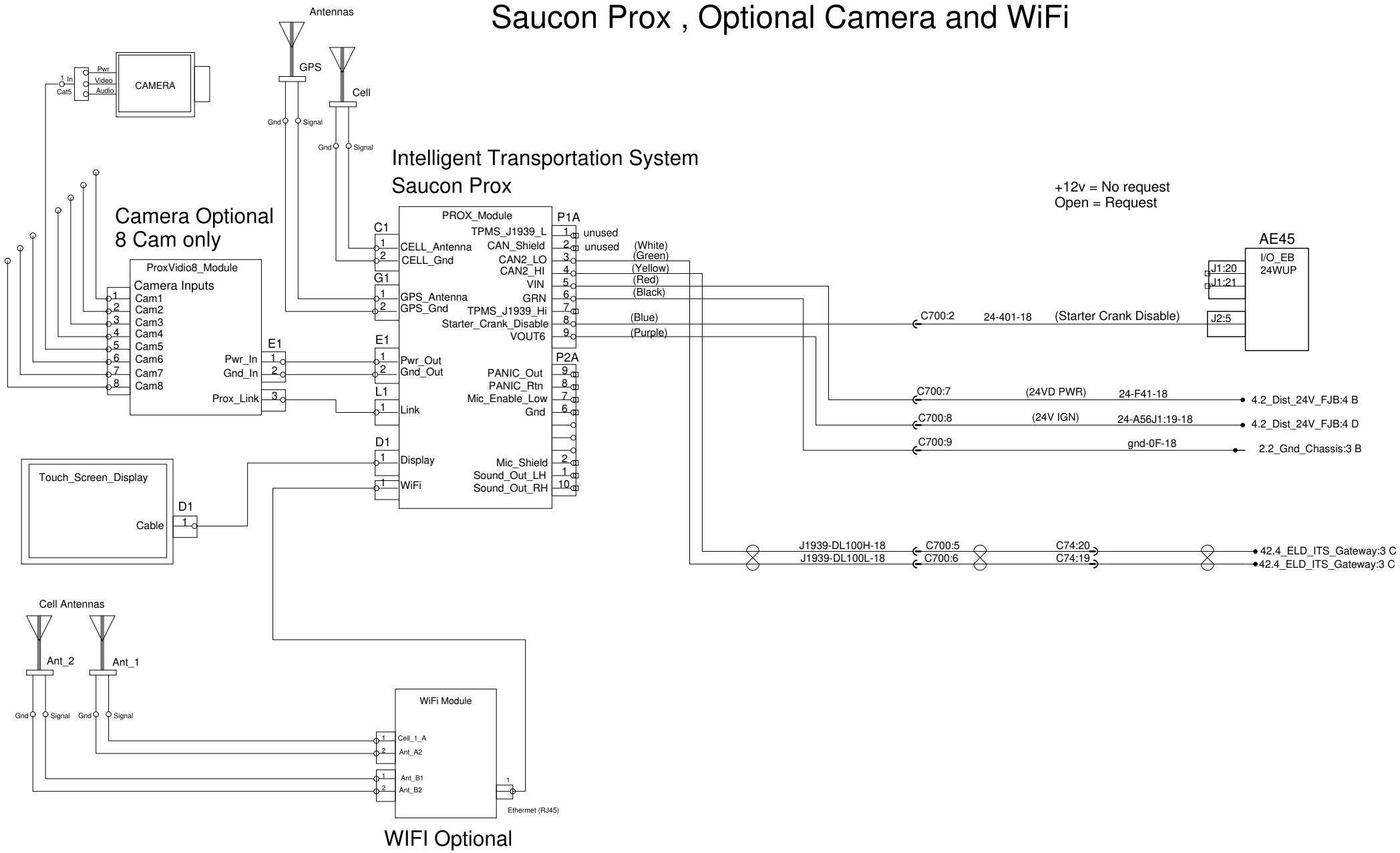

PREVOST®	WIRING DIAGRAM	No:D062140	Page:60.4	Rev:00